AXELERATOR

Axelerator Changelog

2026-01-28

A message for our Sovelia Plant users

Hi from the Axelerator team!

As communicated by Symetri, Axelerator will be separated from Sovelia Plant after version 2026.1, which will be the final release including an integrated version of Axelerator. From that point on, Axelerator will be offered as a standalone product directly by Axelerator AB.

We see this change as a positive step forward. It gives us the opportunity to focus fully on Axelerator's development and to continue improving the product in close dialogue with our users and with even greater flexibility, depth, and pace.

Axelerator will continue to be developed, maintained, and supported with a continued focus on detailed, product-specific content, high data quality, and efficient workflows for Plant 3D users. We are excited about what this next phase will make possible and look forward to continuing to work closely with you.

If you have any questions or would like more information about the offer or licensing options, please feel free to contact us at info@axelerator.se or visit www.axelerator.se.

/The Axelerator Team

2025-12-03

Addition of

Butterfly Valve, AL42-A DN 500, PN 10 & 16

With Gearbox Q-series. Optional position indicator and C5 coating.

Butterfly Valve, AL43-A DN 500, PN 10 & 16

With Gearbox Q-series. Optional position indicator and C5 coating.

Check Valve, AL50-402B DN 40-500, PN 10 & 16

2025-11-12

Addition of the following components:

Ball Valves

Vinco XF Threaded & Butt Weld, with or without stem extension, DN15-100

Vinco CF Flanged, handlever, DN50-100 PN16, DN15-100 PN49

Ahlsell AVI 1350 3P TFM1600	Butt Weld, DN15-50 PN63
Ahlsell AVI 1344 3P TFM1600	Butt Weld with long ends, DN15-100 PN63
Axel Larsson AL35-88	3-way, NPT/Butt Weld, DN15
Ahlsell AVI 1398	Threaded, DN8-80

Butterfly Valves

Armatec AT2311B	Flanged, handlever DN 40-125 & gearbox DN150-300, PN16
BPS 2390XE	Flanged, Gearbox, DN100-1600 PN10
Somas VSS-2	Wafered with multiple wormgear Rotork options, DN80-800 PN10, DN80-1200 PN16, DN80-400 PN40

Check Valves

NAF 528520	Tilting disc, Flanged, DN300-1000 PN10, 16 & 25
NAF 528620	Tilting disc, Wafered, DN40-250 PN10, 16 & 25
NAF 518800	Y-pattern, Threaded, DN8-25 PN100
Erhard ERK	Tilting disc, Flanged, DN150-1400 PN10 & 16
Gefa RG1 RF6666	Disc Check, Wafered, DN15-150 PN10 & 16
Silenta, Klinger	Membrane Check, Threaded, DN 40-150 PN 16 and DN 200-300 PN10

Gate Valves

Vodak AVI 1201	Flanged, Threaded and Butt Weld with long ends, DN8-50 PN16
Persta 808 GJ	Flanged, DN10-40 PN16
KSB STAAL 100 AKDS	Butt Weld, DN300-600 PN63, DN50-600 PN100
KSB STAAL 100 AKD	Flanged, DN50-500 PN63 & 100
VAG EKO Plus	Flanged, Handwheel with rising stem, resilient-seated and short FTF, DN100-300 PN16

Globe Valves

KSB Nori 160 ZXS	Butt Weld, DN10-200 PN63
KSB Nori 160 ZXL	Flanged, DN10-200 PN63 & 100
KSB BOA-H	Flanged, DN15-300 PN16
Persta 240MT 44.8	Socket Weld, DN10-200 PN160
Persta 240MT 44.2	Butt Weld, DN10-200 PN160
Persta 240MT 34.2	Cast Steel, Butt Weld, DN10-200 PN160
Persta 240MT 34.1	Cast Steel, Flanged, DN10-200 PN16

Other Valves

Needle Valve with bridle, Ahlsell 4623211	Threaded, DN10 PN400
Piston Slide Valve, Gabler	Flanged, bronze handwheel, DN20-250 PN16 & 40

Steam Trap, Gestra MK45-2	Flanged, with single seat, DN15-25 PN40
Safety Valve, Axel Larsson AL68-3129	Threaded, DN15 PN25

Pressure Gauges

SINI 2840 XX17 0-60 bar, G Thread

SINI 2940 4015 0-40 bar, 100mm, G Thread, liquid filled

SINI 2940 4019 0-100 bar, 100mm, G Thread, liquid filled

Ahlsell 2940 5113330 0-6 bar, 100mm, G Thread, liquid filled

Ahlsell 2940 5113331 0-10 bar, 100mm, G Thread, liquid filled

Ahlsell 2940 5113332 0-25 bar, 100mm, G Thread, liquid filled

Thermometers

SINI 5502.4, 0-160C, 100mm, Compression fitting, G 1/2" Thread

SIKA 291 B, G 1/2" Thread

Update of the following components:

Ball Valve, AL25-PZ04 & 06	Handlever for DN 15-200 and Gearbox for DN 40-300 PN 16 & 40
Ball Valve, Vexve 100	Butt Weld, DN10-150 Handlever & DN200-500 Gearbox PN25
Gate Valve, Persta 700	HJ & JJ Butt Weld, DN50-150 PN40 & 100
	HJ & JJ Flanged, DN50-150 PN16, 25, 40, 63 & 100
Globe Valve Persta200 AE/BE	AE 44.2 Butt Weld, DN10-50 PN40
	AE 21.2 Butt Weld, DN10-50 PN40

2025-10-29

Addition of

Ball Valve, Vinco XF	DN 10-100, PN 40
Ball Valve, Ahlsell AVI 1344 3P TFM1600	DN 15-100, PN 63

2025-10-24

Addition of Butterfly Valve, AL43-A, with Gearbox Q-series and position indicator, PN10-16, with the option of C5 or C4 coating.

2025-10-23

Addition of PN10 for Butterfly Valve, AL42-A, with Gearbox Q-series. Optional position indicator and C5 coating.

2025-09-16

Addition of Flowmeter Axel Larsson Sitrans FMS500 DN 25-1000, PN 10-40, with the option of C5 or C4 coating.

2025-09-10

Addition of

Ball Valve, AL35-77, without stem extension	DN 10-100
Strainer, AL87-821	DN 15-400 Multiple screens
Strainer, Zetkama zSTRA 821	DN 15-400 Multiple screens
Butterfly Valve, AL42-A, with Gearbox Q-series and position indicator	DN 50-400

2025-08-29

Addition of Axel Larsson Ball Valve AL17-22, Butterfly Valve, Desponia plus and Knife Gate Valve, Orbinox EB w. handwheel

Ball Valve, AL 17-22, Threaded	
Handlever	DN 8-80
Electric Actuator Noah NA Series	Parametric choice of actuator DN 40-80
Butterfly Valve, Desponia plus, Lugged	
Handlever	DN50-200
Electric Actuator Noah NA Series	Parametric choice of actuator DN 50-600
Knife Gate Valve, Orbinox EB	
With handwheel	DN 50-600

2025-08-12

Addition of Axel Larsson Ball Valves AL24- 90D and AL25-90D

AL24-90D, flanged	DN 15-100, PN 16
AL25-90D, flanged	DN 15-150, PN 16

Both available with handlever, electric actuator (AL78) and pneumatic actuator (AL77 alt. AL79).

2025-05-26

Addition of Saunders Diaphragm Valve KB

Threaded	DN15-50

Unlined flanged, short & long build	DN 15-350, PN 10 & 16
Rubber lined flanged, short & long build	DN 25-350, PN 10 & 16
Glass/Halar lined, short & long build	DN 15-350, PN 10 & 16

2025-05-06

Addition of Axel Larsson Control Valve AL72-8021-GS3 with all types of integrated positioners, i/p, p/p och digital positioner.

PN 40 (fits also PN10-25)	DN 15-150
PN 100	DN 15-80
PN 16	DN 200-250

2025-01-30

Addition of Orbinox EB with Electric actuator (rising stem)

DN 50-1200

2025-01-08

Addition of Gemü R470 in PN10-40 with several possible actuators.

Minor correction of long descriptions on Gemü D480 and R480.

2024-12-18

Change of end codes for WF/LUG/FL components that does not require an external gasket.

They are now WFNG/LUGNG/FLNG where NG=No Gasket.

1. Type PLANTENDCODES and add the new end codes. This has to be done on each individual computer and installation. Tick the boxes wafer like or flange like as per below:
    a. WFNG = Wafer like (studbolts from flange to flange)
    b. LUGNG = Flange like (hexbolts on each side)
    c. FLNG = Flange like (hexbolts on each side)

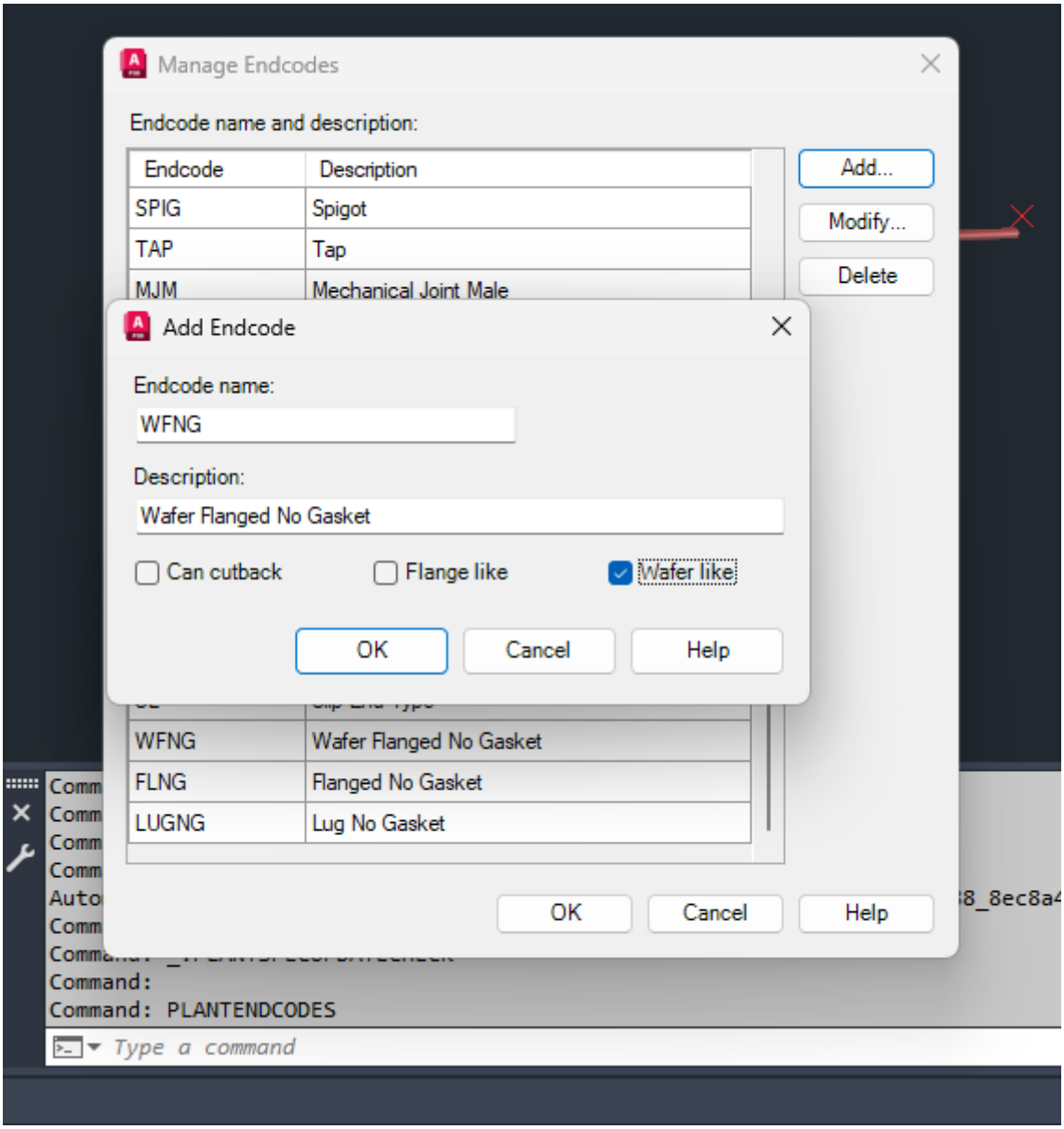

2. Modify Plant 3D Connection Settings in the project setup.
    a. **Simple Joints**: add three simple joints as per below. **Note**: Joint name cannot have blank spaces, therefore we named it WaferFlangedNoGasket. Display name can have blank spaces though.
    b. **Compound joints:** modify Auto flange joint as per below screenshot by adding FLNG, WFNG and LUGNG to End 1 as per below screenshot.

Then you are done! The gaskets will not be added to FLNG/WFNG/LUGNG, thus also removing the build length that the gaskets add.

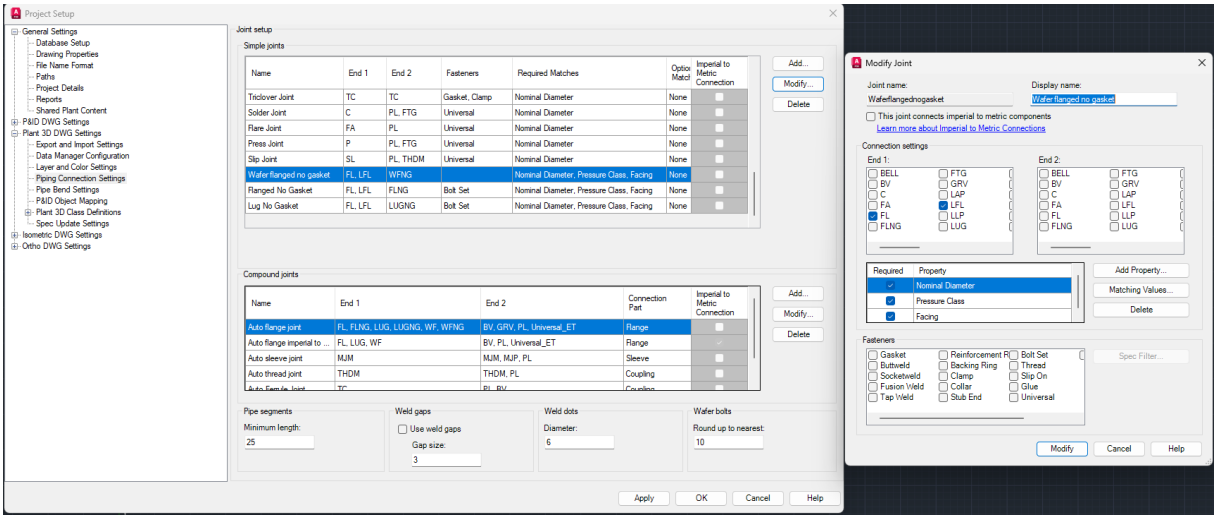

Component	Date changed
AL84 / Stenflex A1/A2/A4 has been changed from FL to FLNG	2024-12-18
AL42 / ABO 900-series has been changed from WF to WFNG	2024-12-19

2024-12-10

Minor update of AL35-55. One of the oldest parts in the library.

- DN 20 Long Weld had the wrong build length. Was 245mm, now 225mm.
- Added isometric symbol for handlever to improve the quality of isometric drawings. SKEY=03SP
- SKEY for threaded valves was incorrect and is now corrected.

2024-11-29

The last part of Gestra, for now.

- Gestra UNA14
- Gestra UNA16
- Gestra UNA 38
- Gestra UNA 39
- Gestra UNA 43
- Gestra UNA 45 and 46 (same geometry)
- Gestra UNA 47 & 47 MAX

UNA 39 that is angled has the SKEY=SA?? For **S**team Trap **A**ngled, the rest have the SKEY=ST?? for linear **S**team **T**rap. A howto on how to create an isometric symbol for Steam Traps will be posted shortly. A couple of webinars will be occurring in December with a step by step walkthrough on howto create such a symbol and some other nice features that we have added to these parts.

2024-11-25

Even more Gestra!

- Gestra BK 212
- Gestra UBK 46

2024-11-22

More Gestra steam components being added:

- Gestra BK 15
- Gestra BK 27N
- Gestra BK 28
- Gestra BK 45/46
- Gestra MK 36-51/52
- Gestra MK 45

All of them come with the SKEY=ST for Steam Trap. Stay tuned, more is coming shortly.

2024-11-18

Adding Gestra steam equipment. We are proud to present that Alnab has decided to add the following Gestra steam components to Axelerator:

- Gestra AK 45
- Gestra MK 25/2 and 25/2S
- Gestra MK 35/31 and MK35/32 (identical geometries with only internal differences)

The isometric SKEY has been set to ST?? for steam traps, but that symbol is not present in the IsoSymbolStyles.dwg in Plant 3D out of the box. Right now, we do not have the technical ability to distribute ISO-symbols, so you will have to draw the symbol and assign it the SKEY ST and then the components will show the correct symbol on the isometric drawings. We have also made that field SKEY and TYPE visible in the main table in Axelerator for this reason to make it easier for you.

2024-11-01

Adding isometric symbol to Vexve 100 ball valves

Changing from handlever to gearbox on DN200 + DN250.

2024-10-31

Minor correction of NAF Triball with different ends.

Minor correction of handle type on Dahl Altech 2006SD, no change in external measures. Only visual.

2024-10-24

Addition of the Persta 200 AE/BE globe valve in DN65-200 to the existing DN10-50. Available in all pressure classes for both BW and FL end types. In addition, the symbol for handwheel has been added for the orientation on the isometric drawings.

2024-10-23

Addition of the Axel Larsson AL50-C check valve, available in DN40-1200 for B1 flanges. Of course this valve comes with the flow direction arrow for easier isometric drawing generation and flow direction set to TRUE.

2024-10-17

Minor fix of NAF Triball. Added DN50 PN25, PN16 and PN10 and also isometric symbol for handlever.

2024-10-16

Addition of the Ahlsell AVI 1398 ball valve in DN8-80, see more info here. It is available in G thread (also called BSPP).

2024-10-08

Addition of Dahl Altech drinking water approved 2-piece and 3-piece stainless steel ball valves in DN8-100. Available for both ISO and metric pipes, as well as mixed ends; LW ISO/BSPP and LW METRIC/BSPP. For more information click here

This is great news, because Dahl launched these valves today and we are delighted to be able to launch them simultaneously in Axelerator :)

2024-10-02

Minor script fix of AL54-800

2024-10-01

Addition of Axel Larsson AL17-20 ball valve in DN8-50.

2024-09-27

Addition of the Vexve 100 ball valve with BW connection.

DN10-250 with Handlever

DN300-500 with Gearbox

2024-09-10

Added the Axel Larsson AL25-PZ (Pekos Z06) valve in PN10.

DN15-150 available with handlever

DN15-300 available with Air Torque (AL79) spring return actuators.

Added the Axel Larsson AL54-800 (Mars Valve YS-800) check valve in DN15-50 with BSPP (G Thread) threads. Also, first time we use a pointer for the flow direction for quicker design so the isometric drawing will have the symbol the correct way the first time.

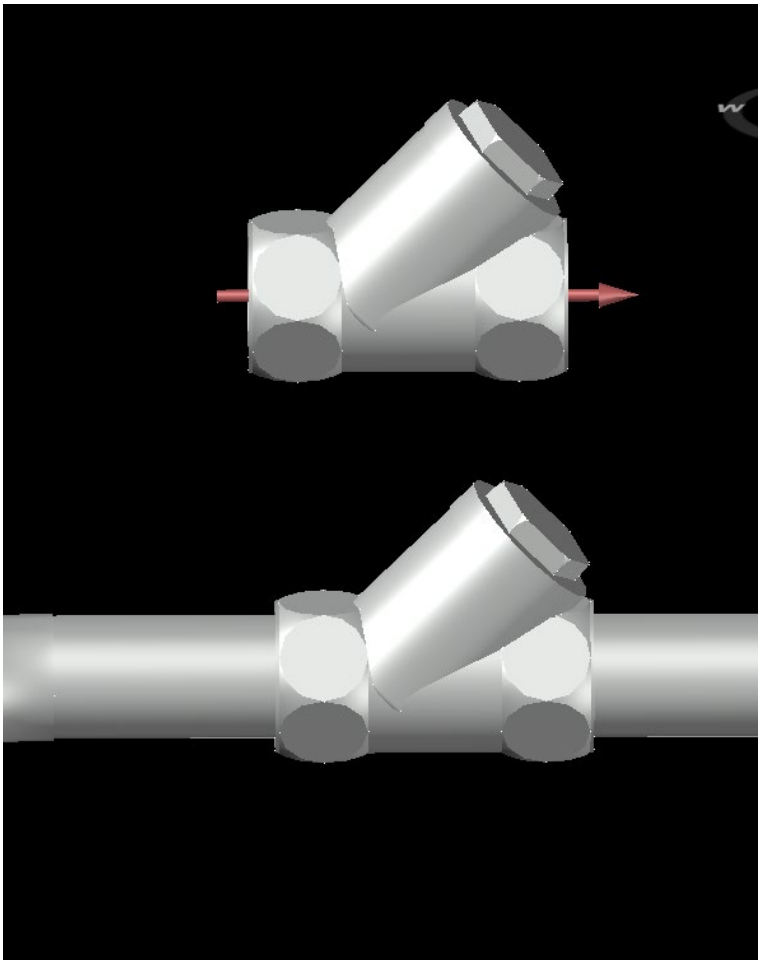

2024-08-16

Minor fix for NAF Torex DN600-700 with gearbox.

2024-08-15

Minor script fix for Gemü R480 for the rotation of the chainwheel in certain sizes.The rotation skipped between 0-180-0 degrees without stopping at 90 and 270 degrees.

AXELERATOR®

2024-08-05

Addition of the Gemü R480 DN400 U-section with chainwheel.

Nominal Diameter	Long Description (Size)
400	Butterfly Valve, Gemü R480 DN400 PN10 Double Flange U-Section Rotork AB880 + Chainwheel 215

2024-07-03

Addition of Gemü R480 and D480 with gearbox and chainwheel as an option on DN100-700 for PN10.

Nominal Diameter	Long Description (Size)
100	Butterfly Valve, Gemü R480 DN100 PN10 Lug Rotork AB210 + Chainwheel 135
150	Butterfly Valve, Gemü R480 DN150 PN10 Lug Rotork AB210 + Chainwheel 135
200	Butterfly Valve, Gemü R480 DN200 PN10 Lug Rotork AB210 + Chainwheel 135
250	Butterfly Valve, Gemü R480 DN250 PN10 Lug Rotork AB550 + Chainwheel 215
300	Butterfly Valve, Gemü R480 DN300 PN10 Lug Rotork AB550 + Chainwheel 215
350	Butterfly Valve, Gemü R480 DN350 PN10 Lug Rotork AB550 + Chainwheel 215
400	Butterfly Valve, Gemü R480 DN400 PN10 Lug Rotork AB880 + Chainwheel 215
450	Butterfly Valve, Gemü R480 DN450 PN10 Double Flange U-Section Rotork AB880 + Chainwheel 215
500	Butterfly Valve, Gemü R480 DN500 PN10 Double Flange U-Section Rotork AB880 + Chainwheel 215
600	Butterfly Valve, Gemü R480 DN600 PN10 Double Flange U-Section Rotork AB1250 + Chainwheel 215
700	Butterfly Valve, Gemü D480 DN700 PN10 Double Flange U-Section Rotork AB1950 + Chainwheel 215

2024-07-02

You asked, we listened. Adding the field EndType in the main view to allow quicker and easier overview of components. The field EndType represents port S1 of a component.

In case a valve has two different end types, like S1=BV and S2=THDF then this field will only display the end type of port 1. We will add port 2 here as well for such circumstances, but that will be launched after the summer holidays.

We wish you all a nice summer!

/Team Axelerator

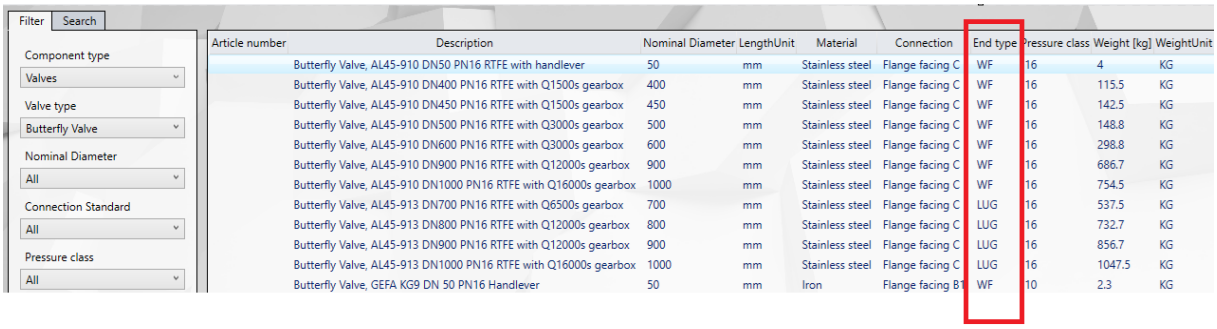

Article number	Description	Nominal Diameter	LengthUnit	Material	Connection	End type	Pressure class	Weight [kg]	WeightUnit
	Butterfly Valve, AL45-910 DN50 PN16 RTFE with handlever	50	mm	Stainless steel	Flange facing C	WF	16	4	KG
	Butterfly Valve, AL45-910 DN400 PN16 RTFE with Q1500s gearbox	400	mm	Stainless steel	Flange facing C	WF	16	115.5	KG
	Butterfly Valve, AL45-910 DN450 PN16 RTFE with Q1500s gearbox	450	mm	Stainless steel	Flange facing C	WF	16	142.5	KG
	Butterfly Valve, AL45-910 DN500 PN16 RTFE with Q3000s gearbox	500	mm	Stainless steel	Flange facing C	WF	16	148.8	KG
	Butterfly Valve, AL45-910 DN600 PN16 RTFE with Q3000s gearbox	600	mm	Stainless steel	Flange facing C	WF	16	298.8	KG
	Butterfly Valve, AL45-910 DN900 PN16 RTFE with Q12000s gearbox	900	mm	Stainless steel	Flange facing C	WF	16	686.7	KG
	Butterfly Valve, AL45-910 DN1000 PN16 RTFE with Q16000s gearbox	1000	mm	Stainless steel	Flange facing C	WF	16	754.5	KG
	Butterfly Valve, AL45-913 DN700 PN16 RTFE with Q6500s gearbox	700	mm	Stainless steel	Flange facing C	LUG	16	537.5	KG
	Butterfly Valve, AL45-913 DN800 PN16 RTFE with Q12000s gearbox	800	mm	Stainless steel	Flange facing C	LUG	16	732.7	KG
	Butterfly Valve, AL45-913 DN900 PN16 RTFE with Q12000s gearbox	900	mm	Stainless steel	Flange facing C	LUG	16	856.7	KG
	Butterfly Valve, AL45-913 DN1000 PN16 RTFE with Q16000s gearbox	1000	mm	Stainless steel	Flange facing C	LUG	16	1047.5	KG
	Butterfly Valve, GEFA KG9 DN 50 PN16 Handlever	50	mm	Iron	Flange facing B1	WF	10	2.3	KG

2023-06-17

Minor script correction and metadata correction of Gemü DN400 and DN700.

2024-06-14

Updated metadata of Gemü R480. Added info that the AC01.2 control unit is included in the design.

Butterfly Valve, Gemü R480 DN25 PN10 Lug Auma SQ SQ05.2 + AC01.2
Butterfly Valve, Gemü R480 DN32 PN10 Lug Auma SQ SQ05.2 + AC01.2
Butterfly Valve, Gemü R480 DN40 PN10 Lug Auma SQ SQ05.2 + AC01.2
Butterfly Valve, Gemü R480 DN50 PN10 Lug Auma SQ SQ05.2 + AC01.2
Butterfly Valve, Gemü R480 DN65 PN10 Lug Auma SQ SQ05.2 + AC01.2
Butterfly Valve, Gemü R480 DN80 PN10 Lug Auma SQ SQ05.2 + AC01.2
Butterfly Valve, Gemü R480 DN100 PN10 Lug Auma SQ SQ05.2 + AC01.2
Butterfly Valve, Gemü R480 DN125 PN10 Lug Auma SQ SQ05.2 + AC01.2
Butterfly Valve, Gemü R480 DN150 PN10 Lug Auma SQ SQ05.2 + AC01.2
Butterfly Valve, Gemü R480 DN200 PN10 Lug Auma SQ SQ07.2 + AC01.2
Butterfly Valve, Gemü R480 DN250 PN10 Lug Auma SQ SQ07.2 + AC01.2
Butterfly Valve, Gemü R480 DN300 PN10 Lug Auma SQ SQ10.2 + AC01.2
Butterfly Valve, Gemü R480 DN350 PN10 Lug Auma SQ SQ10.2 + AC01.2
Butterfly Valve, Gemü R480 DN400 PN10 Lug Auma SQ SQ14.2 + AC01.2
Butterfly Valve, Gemü R480 DN400 PN10 Double Flange U-Section Auma SQ SQ14.2 + AC01.2
Butterfly Valve, Gemü R480 DN450 PN10 Double Flange U-Section Auma SQ SQ14.2 + AC01.2
Butterfly Valve, Gemü R480 DN500 PN10 Double Flange U-Section Auma SQ SQ14.2 + AC01.2
Butterfly Valve, Gemü R480 DN600 PN10 Double Flange U-Section Auma SQ SQ14.2 + AC01.2

2024-06-10

Adding NAF Torex butterfly valve with C-facing. Just a copy/paste of the B1.

2024-05-31

Addition of the Gemü D480 with Auma actuators in DN450-1000 in PN10. All weights are calculcated Valve + Actuator + Gearbox (where applicable) + AC01.2 Control Unit.

2024-05-29

We are very proud to present that Gemü has decided to use Axelerator to host their butterfly valves R480 and D480 for Plant 3D! They are available from DN25-1000 in PN10 with handlever, gearbox and Auma actuators. Both lug and double flange U-section is available. Can be ordered with DVGW drinking water approval.

Model	Handlever	Gearbox	Auma electric actuator
R480	DN25-200	DN65-600	DN25-600
D480	N/A	DN450-1000	DN450-1000

2024-05-23

Minor script fix for Plant 2021 users.Six scripts for the Transair spec has been updated.

2024-05-20

Launch of the Parker Transair BSP-ISO pipepec! Axelerator now features a complete pipe spec from the air tanks to the point of use.

There will be two webinars in about 2 weeks from today that are open for everybody where we, together with Parker Transair representatives will explain how everything works. We will send outlook invitations starting tomorrow Tuesday the 21/5, but you can send an email to info@axelerator.se to get the dates and invitation.

For any technical questions about the products: transairnordics@parker.com

2 easy steps to get going:

1. Go to your project and choose copy spec to project, then select the TRANSAIR_BSP_ISO-spec located here: C:\Users\Public\Documents\Axelerator\Specs
2. Go to your Project Setup -> Piping Connection Settings -> Compound Joints -> Modify Auto flange joint -> tick the box GRV on End 2 as per the screenshot below -> Modify -> Apply -> OK. You are ready to go!

This will allow you to drop the butterfly valve directly onto 76-168mm pipes with autoflange connections. For 63mm you need to add flanges manually from the tool palette/spec viewer.

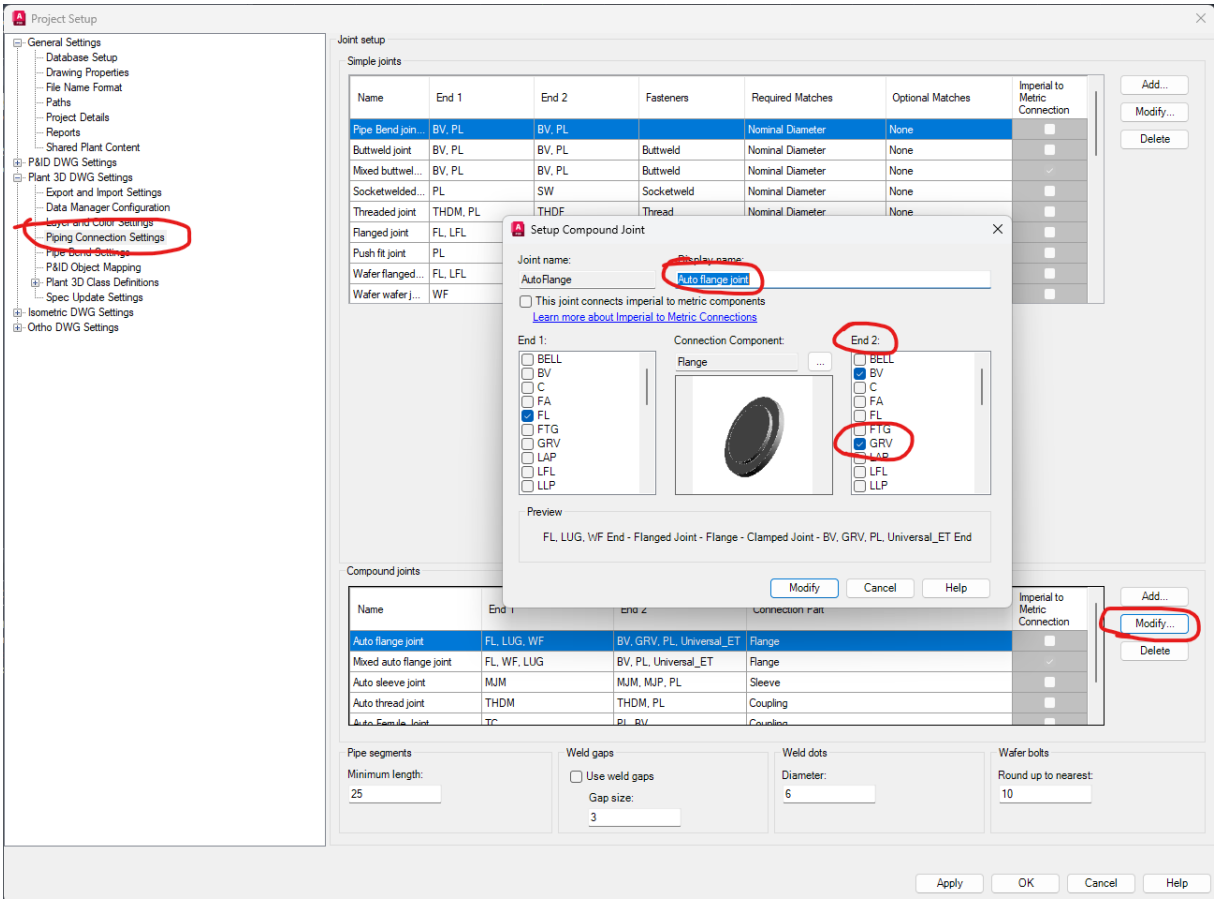

2024-05-07

Re-adding the Siemens P320/420 pressure transmitter and release of the Axelerator v4.1 update.

Important note: Before you use this component, please make sure to upgrade to Axelerator v4.1 since a bug in v4.0 causes Plant 3D to crash with the “FATAL ERROR”-message if that transmitter has been inserted into the dwg.

Downloading and updating to the v4.1 version:

For users of Sovelia and Naviate click here

For users that are direct customers or from the Autodesk Appstore click here

The installation file on the Appstore will be updated with some delay due to the approval process at Autodesk that takes a couple of weeks.

Installation notes

Updating from v3.0 to v4.1

Delete two scripts in the CustomScripts-folder called DISMANTLING_JOINT.py and PROHA.py since they have been renamed.

Updating from v4.0 to v4.1

Just make sure to close down Plant 3D before you upgrade.

When the upgrade is done, you will now see this in the startup of Plant 3D.

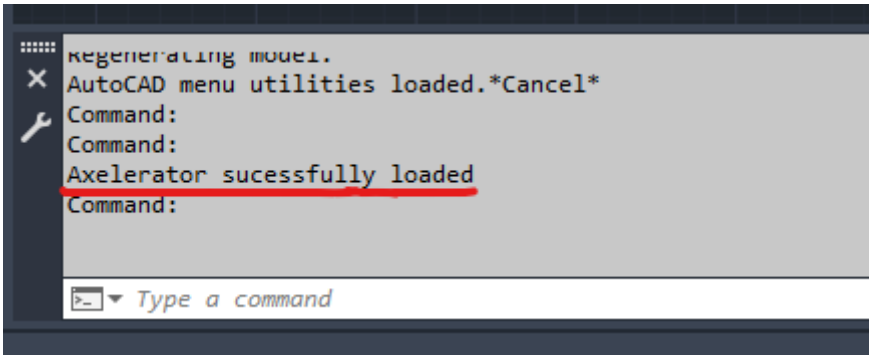

2024-04-10

Correction of the build length of Siemens MAG5100W DN50 and DN65 in PN10. They were too long (250mm and 300mm respectively) and have now been adjusted to 200mm.

2024-03-19

Correction of the AL50-E check valve. All sizes appeared visually as DN40 but has been corrected now. The BOM-lists still generated the correct PartSizeLongDescription.

2024-02-23

Minor update with small corrections:

- NAF Torex butterfly valve had some sizes with gearbox (DN600-700) that have been removed due to lack of correct measures in the datasheets.
- Krohne BM26A magnetic level indicator has received a new 640-image where the CC-distance is easier to understand.
- Krohne Optiswitch 5200 has received a new 640-image where the setting has been renamed from Temperature Adapter Length to Sensor Length.

2024-02-02

- Addition of the NAF Triball Sampling Valve in DN25, 50, 80 and 100. It has the class Nipple in order to appear correctly on isometric drawings with TYPE=VALVE and SKEY=VBBV.
- Addition of gearbox to the knife gate valve Orbinox EK in DN350-1000.

The class Nipple has the displayname “Sampling Valves” for the time being to make it easier to find.

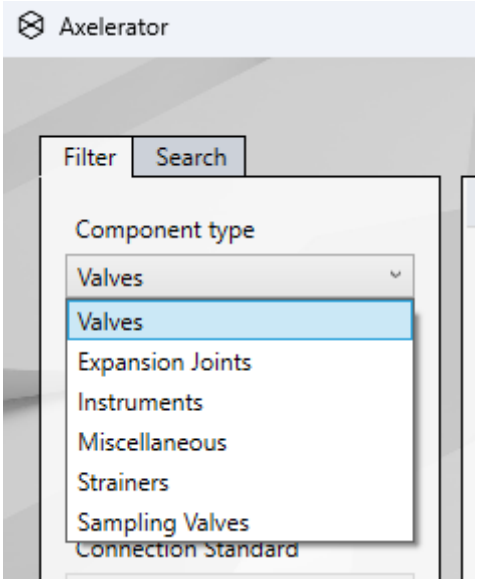

2024-01-30

Addition of the Krohne OPTIFLEX 7200 guided radar transmitter. The parameter for setting the probe length is open and available when you have inserted the component and right click and select properties. Scroll down and you can set the parameter to the desired length.

The threshold values are in mm:

Single Rod	=	Min	600	Max	4000	
Single Cable	=	Min	1000	Max	60 000	
Coaxial	=	Min	300*	Max	6 000	*shorter probe length is available on request

2024-01-29

Addition of the NAF Torex butterfly valve in lugged and wafered edition, available in DN80-700 with handlever, gearbox and pneumatic actuators (double acting, spring close and spring open). The actuators are named after the NAF number in the datasheet, so in order to select the right size please refer to the datasheet.

The extension bracket is optional and can be toggled using the open parameter called BRACKET. The default value is 0 for no bracket. Setting it to 1 adds a bracket between the valve and the actuator and the height of the bracket is determined by the R-value from the datasheet, between 70-150mm depending on valve size.

2024-01-25

- Several minor adjustments of PartSizeLongDesc on Fagerberg components for better readability and clarity.
- Krohne OPTISWIRL 4200C has added graphics of the pressure transmitter.
- Krohne OPTISWITCH 5200 has an open parameter called TAL for adjusting the Temperature Adapter Length. Available range is 100-5500mm and the default value is 100mm.

- Krohne OPTIWAVE 7400C has an open parameter called ANTEXT for adjusting the number of ANTenna EXTensions. Each extension is 105mm and there can be a maximum of 10 extensions. Allowed values are 0-10. If any value is inserted below 0 or above 10, the number of extensions will default to 0.

- Addition of the check valve AL50-E from Axel Larsson. Available in DN40-400 PN10 and 16.

To access the open parameters, right click on the inserted component in the dwg and select properties. Scroll down to the parameter and insert the desired value.

Additional components are coming shortly. Stay tuned.

2024-01-12

The Stenflex A2 and A4 rubber compensators, AL84-A2 and AL84-A4 were missing isometric values. This is now corrected with SKEY=EXFL and TYPE=COUPLING in order to appear correctly on isometric drawings.

2024-01-11

Fix of the AL25-PZ DN200 PN16 valve that had inherited the PN40 flange diameter. This has now been corrected.

2024-01-10

Fix for Plant 2021 users that sometimes experienced an error with the PLANTREGISTERCUSTOMSCRIPTS command.

Fix for the Siemens P320/420 transmitter threads that were off. They are now adjusted to 20.95mm outside diameter.

Addition of

- Krohne Optiwave 7400 C Radar Level Transmitter, available in G/BSPP, EN 1092-1 Flanges, ASME B 16.5 Flanges and NPT, DN40-200.
- Persta 200 AE Globe Valve, available in FL and BV end connections for EN flanges and ISO pipes. The valve can of course be ordered for other pipes. DN10-50 in PN10-163.

2024-01-05

Addition of a vibration level switch instrument; KROHNE OPTISWITCH 5100/5200, available in ASME CL150, NPT, EN 1092-1 PN40, BSPP G Thread (DIN ISO 228).

2024-01-04

Addition of KROHNE BM26A-7000 magnetic level indicator in DN15-50 and ½” to 2”. This component comes with a completely customizable center to center-distance between the flanges.

1. Insert the component as usual in the desired flange size and pressure class
2. Right click the component and go to **properties.** Scroll down to "**Part Properties**" and you will see a clickable picture illustrating the CC-distance. **Edit the CC parameter** below the picture and the instrument will adjust accordingly.
3. Edit the Long Description Size field with the CC-value and append that to the end (optional).

General	
Short Description	Magnetic Level Indicator
Long Description (Size)	Magnetic Level Indicator, Krohne BM26A DN25 PN40 CC=659mm
Long Description (Family)	Magnetic Level Indicator, Krohne BM26A

The threshold values allowed stretches between 300mm to 5500mm, so if you insert anything below 300mm, it will default to 300mm and likewise for values above 5500mm, it will default to 5500mm. The default CC value is 300mm when the component is inserted into the drawing.

Part Properties	
Part Data	
Material	Stainless Steel
Material Code	
Pressure Class	40
Type	
Part Geometry	
Preview	
Dimensions	
CONN	0
CC	300
DN	25
PN	40
X Coordinate (Port 1)	-9030.8979
Y Coordinate (Port 1)	16462.4763
COP Elevation (Port 1)	-300
Top of Pipe	-283.3
Bottom of Pipe	-316.7
Center of Gravity X	-8981.1979
Center of Gravity Y	16470.3143

For more information on the component click here

2024-01-03

Happy New Year!

Addition of:

- KROHNE OPTIMASS 6000 Coriolis Flow Meter in EN and ASME flanges as compact version with the MFC 400 transmitter.
- KROHNE OPTISWIRL 4200C Vortex Flow Meter as compact version in EN flanges.

Both are available under instruments.

AXELERATOR®

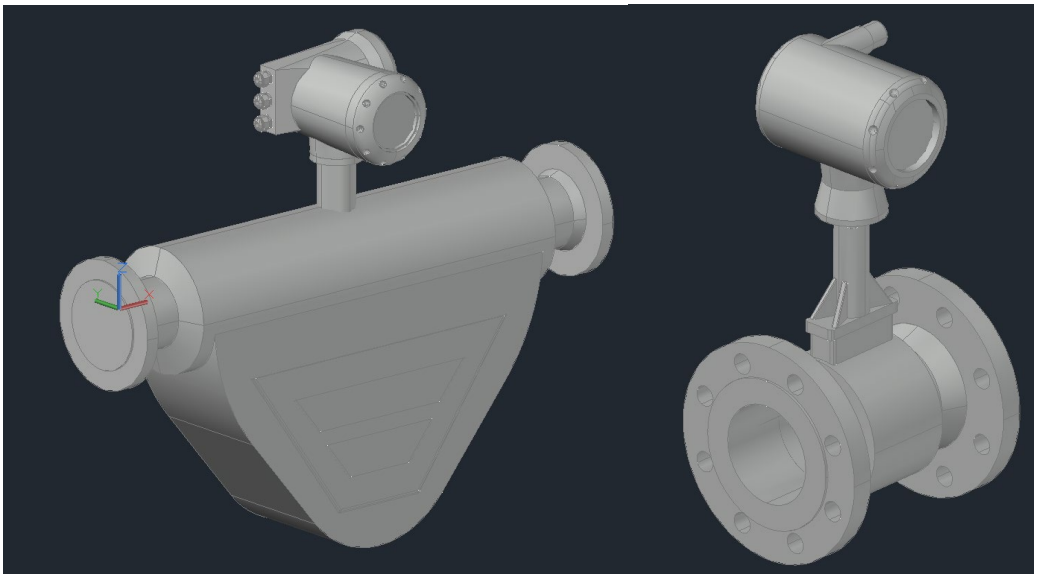

2023-12-20

We are very proud to present that Gustaf Fagerberg AB has decided to use Axelerator to host their products for Plant 3D! The components added are listed in the table below. Several are available with DIN and ASME flanges. The filtering has been extended to accommodate for LengthUnit mm or in. The facing is B1 or C for DIN components and RF for ASME components.

All DIN components are created for metric projects.

All ASME components are created for mixed-metric projects.

The VALTEK GS V701 control valve is located under Instruments in order to appear correctly on isometric drawings.

Stay tuned for many more components coming early 2024!

We wish you all a merry Christmas and a happy new year!

Make	Model	Actuators	Class
Argus	FK79	Handlever and Norbro actuators	Ball valve
Atomac	AKH 2 + AKH 2.2	Handlever and Ameya gearbox	Ball valve
AZ Armaturen	F2	Handlever and Pro-Gear gearbox	Plug valve
GEFA	HG1	Handlever and BGH gearbox	Butterfly valve
GEFA	KG9	Handlever and BGH gearbox	Butterfly valve
KROHNE	H250 M40		Instrument
KROHNE	OPTIFLUX 4000		Instrument
KROHNE	OPTISONIC 3400		Instrument
NAF	Duball DL	Handlever, gearbox and NAF Turnex	Ball valve
NAF	Triball 60-69	Handlever	Ball valve
ORBINOX	EK	Handwheel and pneumatic actuator	Knife gate valve

PERSTA	700 JJ	Handwheel	Gate valve
SIEMENS	Sitrans P320/420		Instrument
VALTEK	GS V701	PMV D30 positioner	Control valve
WORCESTER	A44 & A459	Handlever	Ball valve
WORCESTER	F53 & F54	Handlever	Ball valve
WORCESTER	F519, 529, 819, 829	Handlever	Ball valve

2023-10-31

Update of Altech butterfly valves from Dahl AB. All existing butterfly valves was with EPDM seats and have now received WRAS drinking water approval. The part numbers have been updated as a result. In addition, NBR equivalents have been added. A total of 16 valves have now been added.

Sizes	Long Description (Size)	Compatible Standard	Item Code	Status
50	Butterfly Valve, Altech DN50 EPDM PN16 Wafer Handlever	WRAS	4565135	UPDATED
65	Butterfly Valve, Altech DN65 EPDM PN16 Wafer Handlever	WRAS	4565136	UPDATED
80	Butterfly Valve, Altech DN80 EPDM PN16 Wafer Handlever	WRAS	4565137	UPDATED
100	Butterfly Valve, Altech DN100 EPDM PN16 Wafer Handlever	WRAS	4565138	UPDATED
125	Butterfly Valve, Altech DN125 EPDM PN16 Wafer Handlever	WRAS	4565139	UPDATED
150	Butterfly Valve, Altech DN150 EPDM PN16 Wafer Handlever	WRAS	4565140	UPDATED
200	Butterfly Valve, Altech DN200 EPDM PN10 Wafer Handlever	WRAS	4565141	UPDATED
250	Butterfly Valve, Altech DN250 EPDM PN10 Wafer Gearbox	WRAS	4565142	UPDATED
300	Butterfly Valve, Altech DN300 EPDM PN10 Wafer Gearbox	WRAS	4565143	UPDATED
50	Butterfly Valve, Altech DN50 EPDM PN16 Lug Handlever	WRAS	4565128	UPDATED
65	Butterfly Valve, Altech DN65 EPDM PN16 Lug Handlever	WRAS	4565129	UPDATED
80	Butterfly Valve, Altech DN80 EPDM PN16 Lug Handlever	WRAS	4565130	UPDATED
100	Butterfly Valve, Altech DN100 EPDM PN16 Lug Handlever	WRAS	4565131	UPDATED
125	Butterfly Valve, Altech DN125 EPDM PN16 Lug Handlever	WRAS	4565132	UPDATED
150	Butterfly Valve, Altech DN150 EPDM PN16 Lug Handlever	WRAS	4565133	UPDATED
200	Butterfly Valve, Altech DN200 EPDM PN10 Lug Handlever	WRAS	4565134	UPDATED
50	Butterfly Valve, Altech DN50 NBR PN16 Wafer Handlever		4565200	NEW
65	Butterfly Valve, Altech DN65 NBR PN16 Wafer Handlever		4565201	NEW
80	Butterfly Valve, Altech DN80 NBR PN16 Wafer Handlever		4565202	NEW
100	Butterfly Valve, Altech DN100 NBR PN16 Wafer Handlever		4565203	NEW
125	Butterfly Valve, Altech DN125 NBR PN16 Wafer Handlever		4565204	NEW
150	Butterfly Valve, Altech DN150 NBR PN16 Wafer Handlever		4565205	NEW
200	Butterfly Valve, Altech DN200 NBR PN10 Wafer Handlever		4565206	NEW
250	Butterfly Valve, Altech DN250 NBR PN10 Wafer Gearbox		4565207	NEW
300	Butterfly Valve, Altech DN300 NBR PN10 Wafer Gearbox		4565208	NEW
50	Butterfly Valve, Altech DN50 NBR PN16 Lug Handlever		4565209	NEW
65	Butterfly Valve, Altech DN65 NBR PN16 Lug Handlever		4565210	NEW

80	Butterfly Valve, Altech DN80 NBR PN16 Lug Handlever		4565211	NEW
100	Butterfly Valve, Altech DN100 NBR PN16 Lug Handlever		4565212	NEW
125	Butterfly Valve, Altech DN125 NBR PN16 Lug Handlever		4565213	NEW
150	Butterfly Valve, Altech DN150 NBR PN16 Lug Handlever		4565214	NEW
200	Butterfly Valve, Altech DN200 NBR PN10 Lug Handlever		4565215	NEW

2023-10-05

Filtering update on all components. We tested this one month ago and now this is live for all components. The filtering has the following logic for all components in a tree structure:

1. Component type (Class)
2. Short Description
3. Nominal Diameter
4. Connection Standard
5. Pressure Class

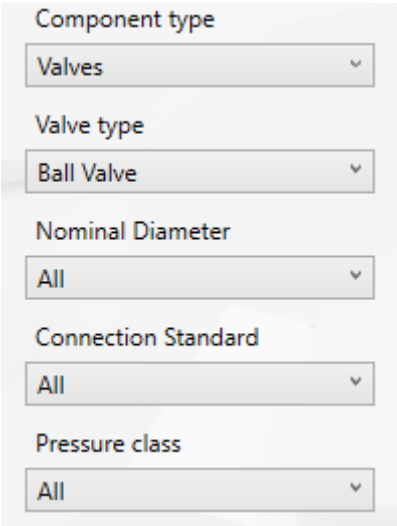

2023-09-22

Correction on AL35-77 with stem extension. The endcodes was accidentally set to BV for both threaded and welded sides. This is now corrected with BV and THDF for the affected components. In addition, the isometric SKEY has been corrected to VB?? for the valves with BSPP/BW connections in order for Plant 3D to render the correct symbols on the isometric drawings.

2023-09-13

Minor adjustment of the metadata of the rubber compensator AL84-A1.

2023-09-12

Addition of the ball valve model AL35-77 with stem extension from Axel Larsson AB.

We have added it in the following combinations of DN10-100:

THDF/THDF

THDF/Long Weld Ends ISO

THDF/Long Weld Ends DIN

Long Weld Ends ISO/ Long Weld Ends ISO

Long Weld Ends DIN/ Long Weld Ends DIN

It can also be actuated by electric and pneumatic actuators with stem extension added.

2023-09-05

Improved filtering of components with the intention of making it easier and more intuitive to find the right component as the library keeps growing.

We are rolling out the new filtering for the following components:

- Expansion Joints
- Instruments
- Strainers
- Ball Valves

Feedback is much appreciated and then we will roll out the changes to all the components.

The user can now filter by manufacturer and/or distributor as well.

2023-08-25

Minor adjustments in the database for distributor and manufacturer fields.

2023-08-17

Addition of the AL43 lugged valve in DN40, both PN10 and PN16. Available with lever, gearbox and actuators.

2023-08-04

Addition of the Stenflex rubber compensators model A2 and model A4 with NBR and EPDM rubber. They are available under Dismantling Joints and AL84-A2 and AL84-A4. Sizes DN20-150 comes in PN10 and PN16 since they share the same flanges, whereas DN200-1000 are added as PN10.For more information on the rubber compensators, click here

Axelerator 4.0 will be rolled out shortly. Stay tuned!

2023-06-20

Preparing for next release of Axelerator.

2023-06-19

Minor update with some script renaming for coming conent updates.

2023-06-05

Addition of a DVGW W570 drinking water approved 2-piece ball valve by End Armaturen. Available in DN8-50 with female BSPP connection. More information on the manufacturer homepage is here and the Swedish supplier homepage is here

Sizes	Long Description (Size)	Pressure Class	ConnectionStd
8	Ball Valve, End Armaturen FW DN8 PN40 DVGW W570 BSPP	40	BSPP
10	Ball Valve, End Armaturen FW DN10 PN40 DVGW W570 BSPP	40	BSPP
15	Ball Valve, End Armaturen FW DN15 PN40 DVGW W570 BSPP	40	BSPP
20	Ball Valve, End Armaturen FW DN20 PN40 DVGW W570 BSPP	40	BSPP
25	Ball Valve, End Armaturen FW DN25 PN40 DVGW W570 BSPP	40	BSPP
32	Ball Valve, End Armaturen FW DN32 PN25 DVGW W570 BSPP	25	BSPP
40	Ball Valve, End Armaturen FW DN40 PN25 DVGW W570 BSPP	25	BSPP
50	Ball Valve, End Armaturen FW DN50 PN25 DVGW W570 BSPP	25	BSPP

2023-06-02

Addition of a ball check valve by Castflow, available in the sizes DN40-600 in PN10. The part number is referring to the model VM6540 by Ventim in Sweden. More information of the check valve can be found at the manufacturer homepage or Ventim's homepage

Nominal Diameter	Long Description (Size)
40	Ball Check Valve, Castflow VM6540 NBR DN40 PN10
50	Ball Check Valve, Castflow VM6540 NBR DN50 PN10
65	Ball Check Valve, Castflow VM6540 NBR DN65 PN10
80	Ball Check Valve, Castflow VM6540 NBR DN80 PN10
100	Ball Check Valve, Castflow VM6540 NBR DN100 PN10
125	Ball Check Valve, Castflow VM6540 NBR DN125 PN10
150	Ball Check Valve, Castflow VM6540 NBR DN150 PN10
200	Ball Check Valve, Castflow VM6540 NBR DN200 PN10
250	Ball Check Valve, Castflow VM6540 NBR DN250 PN10
300	Ball Check Valve, Castflow VM6540 NBR DN300 PN10
350	Ball Check Valve, Castflow VM6540 NBR DN350 PN10
400	Ball Check Valve, Castflow VM6540 NBR DN400 PN10
450	Ball Check Valve, Castflow VM6540 NBR DN450 PN10
500	Ball Check Valve, Castflow VM6540 NBR DN500 PN10

600	Ball Check Valve, Castflow VM6540 NBR DN600 PN10

2023-05-25

Minor update on metadata on Dahl strainers and ball valve NDL 2012. LongDescriptionSize now contains information on the connection, such as ISO or BSPP.

2023-05-11

Addition of the Erhardt Infinity valve with Auma SA actuators including the AC01.2 control unit for on/off actuation. The total weight is calculated with the heaviest version of the actuator, meaning the AD version that includes the planetary gearbox for certain operating times. The VD version is 1-4kg lighter.

More information on the valve is available here and the actuator here. The valve is DVGW W270 approved.

Nominal Diameter	Long Description (Size)	Weight	Weight Unit	Pressure Class
40	Gate Valve, Erhardt Infinity DN40 PN10/16 Auma SA07.2 + AC01.2 3-phase	36,5	KG	10
50	Gate Valve, Erhardt Infinity DN50 PN10/16 Auma SA07.2+ AC01.2 3-phase	38,1	KG	10
65	Gate Valve, Erhardt Infinity DN65 PN10/16 Auma SA07.6+ AC01.2 3-phase	43,1	KG	10
80	Gate Valve, Erhardt Infinity DN80 PN10/16 Auma SA07.6+ AC01.2 3-phase	44,5	KG	10
100	Gate Valve, Erhardt Infinity DN100 PN10/16 Auma SA07.6+ AC01.2 3-phase	47,2	KG	10
125	Gate Valve, Erhardt Infinity DN125 PN10/16 Auma SA10.2+ AC01.2 3-phase	57,3	KG	10
150	Gate Valve, Erhardt Infinity DN150 PN10/16 Auma SA10.2+ AC01.2 3-phase	62	KG	10
200	Gate Valve, Erhardt Infinity DN200 PN10 Auma SA10.2+ AC01.2 3-phase	85,7	KG	10
250	Gate Valve, Erhardt Infinity DN250 PN10 Auma SA14.2+ AC01.2 3-phase	131,3	KG	10
300	Gate Valve, Erhardt Infinity DN300 PN10 Auma SA14.2+ AC01.2 3-phase	158,3	KG	10
40	Gate Valve, Erhardt Infinity DN40 PN10/16 Auma SA07.2 + AC01.2 3-phase	36,5	KG	16
50	Gate Valve, Erhardt Infinity DN50 PN10/16 Auma SA07.2+ AC01.2 3-phase	38,1	KG	16
65	Gate Valve, Erhardt Infinity DN65 PN10/16 Auma SA07.6+ AC01.2 3-phase	43,1	KG	16
80	Gate Valve, Erhardt Infinity DN80 PN10/16 Auma SA07.6+ AC01.2 3-phase	44,5	KG	16
100	Gate Valve, Erhardt Infinity DN100 PN10/16 Auma SA07.6+ AC01.2 3-phase	47,2	KG	16
125	Gate Valve, Erhardt Infinity DN125 PN10/16 Auma SA10.2+ AC01.2 3-phase	57,3	KG	16
150	Gate Valve, Erhardt Infinity DN150 PN10/16 Auma SA10.2+ AC01.2 3-phase	62	KG	16
200	Gate Valve, Erhardt Infinity DN200 PN16 Auma SA10.2+ AC01.2 3-phase	85,7	KG	16
250	Gate Valve, Erhardt Infinity DN250 PN16 Auma SA14.2+ AC01.2 3-phase	131,3	KG	16
300	Gate Valve, Erhardt Infinity DN300 PN16 Auma SA14.2+ AC01.2 3-phase	158,3	KG	16

2023-05-11 Picture 1. *Erhardt Infinity with Auma SA actuator*

2023-04-17

Minor adjustment of geometry parameters on the AL35-77 valve with actuators.

2023-03-22

Addition of AL25-PZ (Pekos Z04 and Z06) DN15-40 as PN16, since they share the same flange as PN40. Added as both B1 and C facing.

Long Description (Size)	Pressure Class_S-ALL
Ball Valve, AL25-PZ06 SS DN15 TTTG PN40 F05 L: F4	16
Ball Valve, AL25-PZ06 SS DN20 TTTG PN40 F05 L: F4	16
Ball Valve, AL25-PZ06 SS DN25 TTTG PN40 F05 L: F4	16
Ball Valve, AL25-PZ06 SS DN32 TTTG PN40 F05 L: F4	16
Ball Valve, AL25-PZ06 SS DN40 TTTG PN40 F07 L: F4	16
Ball Valve, AL25-PZ04 CS DN15 TTTG PN40 F05 F4	16
Ball Valve, AL25-PZ04 CS DN20 TTTG PN40 F05 F4	16
Ball Valve, AL25-PZ04 CS DN25 TTTG PN40 F05 F4	16
Ball Valve, AL25-PZ04 CS DN32 TTTG PN40 F05 F4	16
Ball Valve, AL25-PZ04 CS DN40 TTTG PN40 F07 F4	16

2023-02-07

Minor update of scripts and fixes that improves the visual quality of some components.

2023-01-20

Minor xml-update to sort out the filtering. Strainers, expansion joints and dismantling joints have now been moved into their correct category for easier overview and for more futureproof scalability.

Also, the connection standard for the GEKA quick coupling now says BSPP which was missing before.

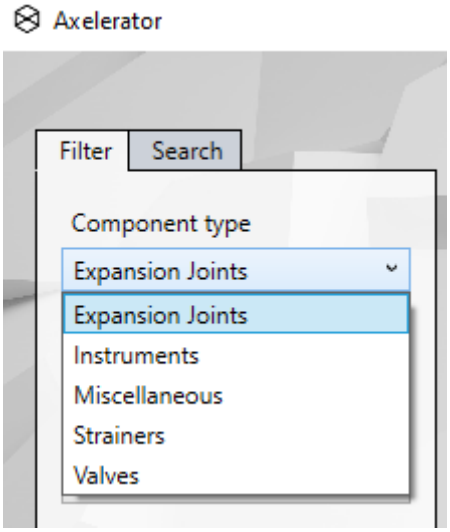

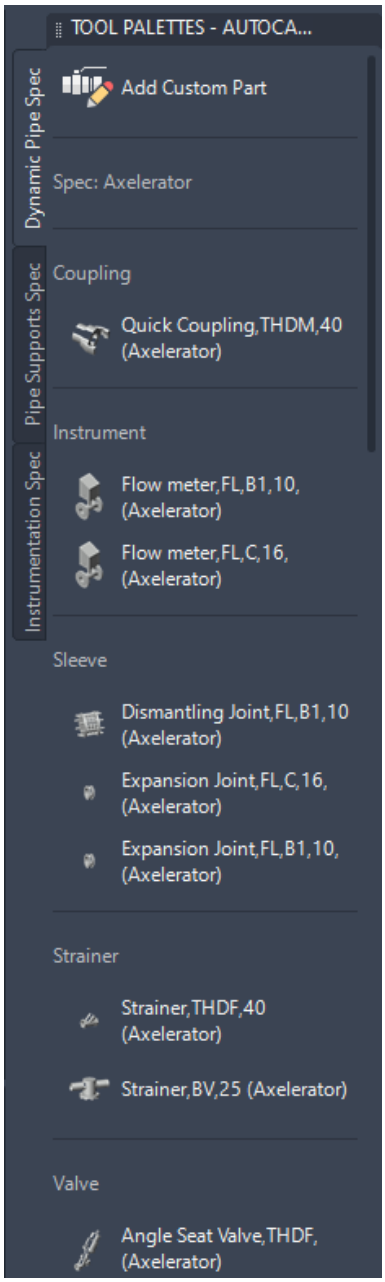

2023-01-13

Addition of Tecofi, Bi-Directional Knife Gate Valve with Double Acting Pneumatic Actuator. Available in DN50-500 with NBR seal, more info here

Size	Long desc (size)
DN50	Knife Gate Valve, VGB 4400-03 DN50

DN65	Knife Gate Valve, VGB 4400-03 DN65
DN80	Knife Gate Valve, VGB 4400-03 DN80
DN100	Knife Gate Valve, VGB 4400-03 DN100
DN125	Knife Gate Valve, VGB 4400-03 DN125
DN150	Knife Gate Valve, VGB 4400-03 DN150
DN200	Knife Gate Valve, VGB 4400-03 DN200
DN250	Knife Gate Valve, VGB 4400-03 DN250
DN300	Knife Gate Valve, VGB 4400-03 DN300
DN350	Knife Gate Valve, VGB 4400-03 DN350
DN400	Knife Gate Valve, VGB 4400-03 DN400
DN450	Knife Gate Valve, VGB 4400-03 DN450
DN500	Knife Gate Valve, VGB 4400-03 DN500

2023-01-13 *Tecofi VGB 4400-03*

2022-12-30

We are very proud to present that Dahl AB has decided to use Axelerator to host their products for Plant 3D! In this release, there are 7 new products added to the library, being four ball valves, two strainers, and one butterfly valve.

1. **Ball valve Altech 2012 NDL** with long weld ends in acidproof stainless steel. Available in DN15-100 with handlever. More info here

Size	Part number	Long desc (size)
DN15	801024	Ball Valve, Altech 2012 NDL DN15 PN63 ISO
DN20	801025	Ball Valve, Altech 2012 NDL DN20 PN63 ISO
DN25	801026	Ball Valve, Altech 2012 NDL DN25 PN63 ISO
DN32	801027	Ball Valve, Altech 2012 NDL DN32 PN63 ISO
DN40	801028	Ball Valve, Altech 2012 NDL DN40 PN63 ISO
DN50	801029	Ball Valve, Altech 2012 NDL DN50 PN63 ISO
DN65	801030	Ball Valve, Altech 2012 NDL DN65 PN63 ISO
DN80	801031	Ball Valve, Altech 2012 NDL DN80 PN63 ISO
DN100	801032	Ball Valve, Altech 2012 NDL DN100 PN63 ISO

2022-12-30. Picture 1. *Altech 2012 NDL*

2. **Ball valve 2012M** with short weld ends in acidproof stainless steel. Available in DN15-50 with handlever. More info here

Size	Part number	Long desc (size)
DN15	9110617	Ball Valve, Altech 2012M DN15 PN63 ISO
DN20	9110618	Ball Valve, Altech 2012M DN20 PN63 ISO
DN25	9110619	Ball Valve, Altech 2012M DN25 PN63 ISO
DN32	9110620	Ball Valve, Altech 2012M DN32 PN63 ISO
DN40	9110621	Ball Valve, Altech 2012M DN40 PN63 ISO
DN50	9110622	Ball Valve, Altech 2012M DN50 PN63 ISO

2022-12-30. Picture 2. *Altech 2012M*

3. **Ball valve 2013M** with threaded BSPP connection in acidproof stainless steel. Available in DN10-50 with handlever. More info here

Size	Part number	Long desc (size)
DN10	9110601	Ball Valve, Altech 2013M DN10 PN63 BSPP
DN15	9110602	Ball Valve, Altech 2013M DN15 PN63 BSPP
DN20	9110603	Ball Valve, Altech 2013M DN20 PN63 BSPP
DN25	9110604	Ball Valve, Altech 2013M DN25 PN63 BSPP
DN32	9110605	Ball Valve, Altech 2013M DN32 PN63 BSPP
DN40	9110606	Ball Valve, Altech 2013M DN40 PN63 BSPP
DN50	9110607	Ball Valve, Altech 2013M DN50 PN63 BSPP

2022-12-30. Picture 3. *Altech 2013M*

4. **Ball valve Altech 2006** with BSPP threaded connection in acidproof stainless steel. Available in DN8-80 with handlever. More info here

Size	Part number	Long desc (size)
DN8	9140300	Ball Valve, Altech 2006 DN8 PN150 BSPP
DN10	9140301	Ball Valve, Altech 2006 DN10 PN150 BSPP
DN15	9140302	Ball Valve, Altech 2006 DN15 PN150 BSPP
DN20	9140303	Ball Valve, Altech 2006 DN20 PN150 BSPP
DN25	9140304	Ball Valve, Altech 2006 DN25 PN150 BSPP
DN32	9140305	Ball Valve, Altech 2006 DN32 PN100 BSPP
DN40	9140306	Ball Valve, Altech 2006 DN40 PN100 BSPP
DN50	9140307	Ball Valve, Altech 2006 DN50 PN100 BSPP
DN65	9140308	Ball Valve, Altech 2006 DN65 PN63 BSPP
DN80	9140309	Ball Valve, Altech 2006 DN80 PN63 BSPP

2022-12-30. Picture 4. *Altech 2006*

5. **Strainer Altech 2049** with BSPP threaded connection in acidproof stainless steel. Available in DN15-50. More info here

Size	Part number	Long desc (size)
DN15	9113000	Strainer, Altech 2049 DN15 BSPP
DN20	9113001	Strainer, Altech 2049 DN20 BSPP
DN25	9113002	Strainer, Altech 2049 DN25 BSPP
DN32	9113003	Strainer, Altech 2049 DN32 BSPP
DN40	9113004	Strainer, Altech 2049 DN40 BSPP
DN50	9113005	Strainer, Altech 2049 DN50 BSPP

2022-12-30. Picture 5. *Altech 2049*

6. **Strainer Altech** with ISO weld ends. Available in DN15-150. More info here

Size	Part number	Long desc (size)
DN15	5064149	Strainer, Altech DN15 PN40 ISO
DN20	5064150	Strainer, Altech DN20 PN40 ISO
DN25	5064151	Strainer, Altech DN25 PN40 ISO
DN32	5064152	Strainer, Altech DN32 PN40 ISO
DN40	5064153	Strainer, Altech DN40 PN40 ISO
DN50	5064154	Strainer, Altech DN50 PN40 ISO
DN65	5064155	Strainer, Altech DN65 PN25 ISO
DN80	5064156	Strainer, Altech DN80 PN25 ISO
DN100	5064157	Strainer, Altech DN100 PN25 ISO
DN125	5064158	Strainer, Altech DN125 PN25 ISO
DN150	5064159	Strainer, Altech DN150 PN25 ISO

2022-12-30. Picture 6. Altech strainer

7. **Altech butterfly valve**, both lugged and wafered version with EPDM seal. Available in DN50-200 with handlever and DN250-300 with gearbox. DN50-150 fits PN16 and DN200-300 fits PN10. More info about wafered version and lugged version.

2022-12-30. Picture 7. Altech butterfly valve wafer

2022-12-30. Picture 8. Altech butterfly valve lug

Size	Part number	Long desc (size)
DN50	4658982	Butterfly valve, Altech DN50 PN16 EPDM wafer lever
DN65	4658983	Butterfly valve, Altech DN65 PN16 EPDM wafer lever
DN80	4658984	Butterfly valve, Altech DN80 PN16 EPDM wafer lever
DN100	4658985	Butterfly valve, Altech DN100 PN16 EPDM wafer lever
DN125	4658986	Butterfly valve, Altech DN125 PN16 EPDM wafer lever
DN150	4658987	Butterfly valve, Altech DN150 PN16 EPDM wafer lever
DN200	4658988	Butterfly valve, Altech DN200 PN10 EPDM wafer lever
DN250	4658989	Butterfly valve, Altech DN250 PN10 EPDM wafer gearbox
DN300	4658990	Butterfly valve, Altech DN300 PN10 EPDM wafer gearbox
Size	**Part number**	**Long desc (size)**
DN50	4659459	Butterfly valve, Altech DN50 PN16 EPDM lug lever
DN65	4659460	Butterfly valve, Altech DN65 PN16 EPDM lug lever
DN80	4659461	Butterfly valve, Altech DN80 PN16 EPDM lug lever
DN100	4659462	Butterfly valve, Altech DN100 PN16 EPDM lug lever
DN125	4659463	Butterfly valve, Altech DN125 PN16 EPDM lug lever
DN150	4659464	Butterfly valve, Altech DN150 PN16 EPDM lug lever
DN200	4659465	Butterfly valve, Altech DN200 PN10 EPDM lug lever

2022-11-25

Addition of AL45-910 and AL45-913 in PN10 for DN80-150.

The valve is always PN16, so the Long Description (Size) will always be PN16.

Artikelnummer	Beskrivning	Vikt [kg]	Nominell diameter	Material	Anslutning	Tryckklass	Manöverdon typ	Manöverdon	Magnetventil	Lägesindikering
	Butterfly Valve, AL45-913 DN50 PN16 AL79-101SR	6.7	50	Stainless Steel	Flange facing B1	16	Fail Close	AL79 101U-SR F05-F07/14	ATEX	
	Butterfly Valve, AL45-913 DN50 PN16 AL79-101SR	6.7	50	Stainless Steel	Flange facing B1	10	Fail Close	AL79 101U-SR F05-F07/14	ATEX	

2022-11-21

- Addition of DN350 and DN400 of the AL13-42 Gate Valve, both in PN10.
- Also; massive update of the database regarding the right-click function for webpage linking. Most B1 parts are now in the format <valve type> [www.homepage.domain]. Also, the link to the manufacturer is also available whenever possible.

2022-11-21 Picture 1. *Image of AL13-42 gate valve*

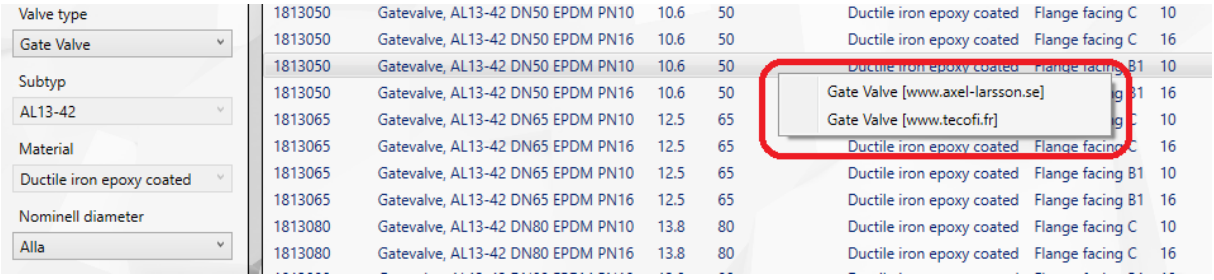

2022-11-21 Picture 2. *Screenshot of the database update on right click.*

2022-11-15

Minor update on some check valves that happened to show up under Gate Valve with facing C. This is now sorted. Another update will follow soon with more components and updates on weblinks.

2022-10-24

Release of two new components: piston check valve and a needle valve, both by VYC Industrial.

2022-10-24 Picture 1. *Piston Check Valve model 179 by VYC Industrial*

Wide range of usage of this check valve. Up to PN250 and high temperatures up to 400C. For more information, click here

2022-10-24 Picture 2. *Needle Valve model 147 by VYC Industrial*

Wide range of usage of this check valve. Up to PN250 and high temperatures up to 400C. For more information, click here

2022-09-15

Release of the AL45-91 valve by Valve Valves with electric actuators from Rotork. The actuators come in four different geometries depending on the size.

The valve has been launched in the 910 and 913 models, meaning stainless steel body with PTFE seats. The 930 and 933 models may come at a later stage with the difference being stainless steel seats for applications in higher temperatures.

For more information on the actuators, click here

The actuators come as on/off as default, but can be equipped with an add-in chip for 4-20mA actuation. The chip can also be retrofitted.

The AL45-91 valve is available with actuators in sizes DN50-600. For valves above that size, please consult Axelerator.

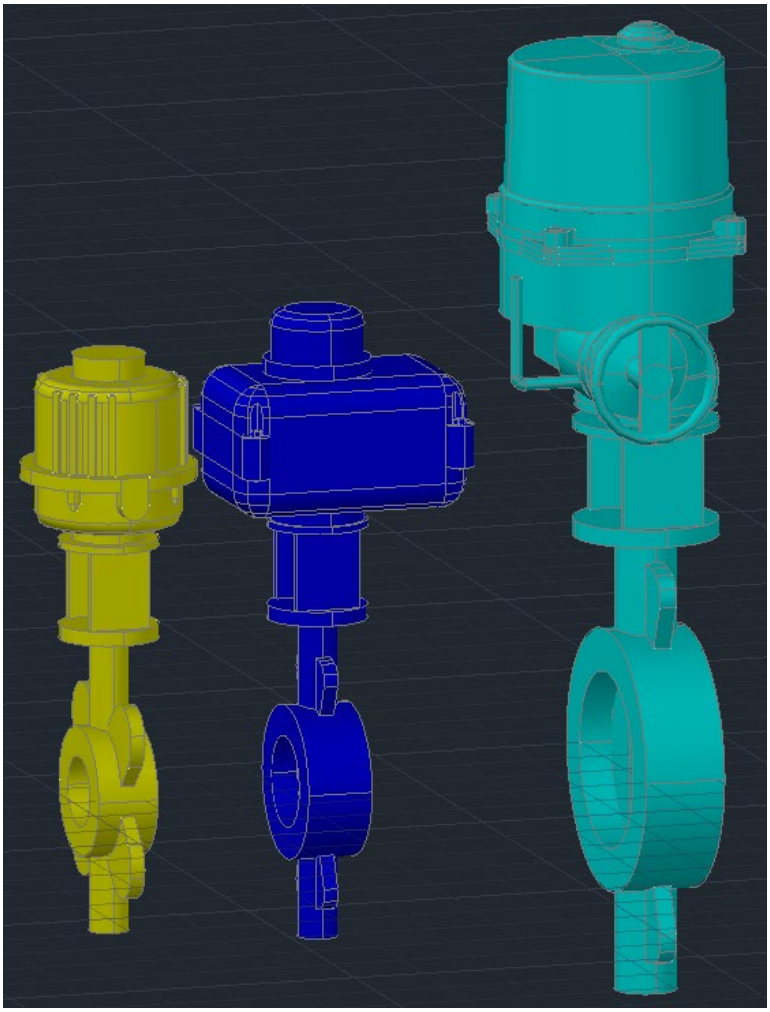

2022-09-06

Release of the AL45-91 valve by Valve Valves with pneumatic actuators from Air Torque. The valve was released earlier this year, but now it has the addition of actuators. In a later release, electric actuators will be added.

AXELERATOR | BOX 805 | SE-194 28 Upplands Väsby | axelerator.se | info@axelerator.se | 08-670 65 67

Visiting Address | Nybrogatan 34 | 114 39 Stockholm

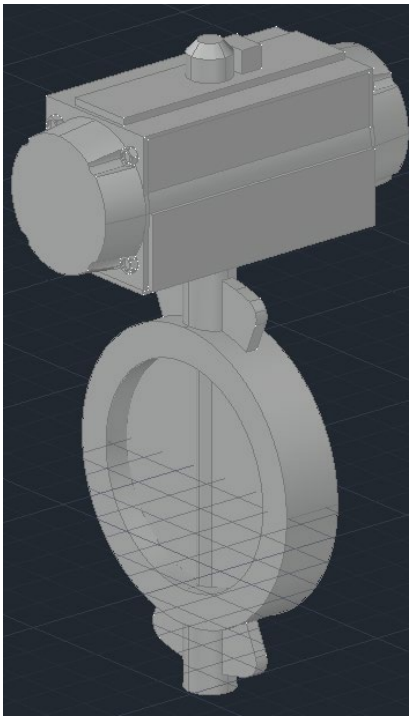

2022-08-18

Release of Axelerator v3.0! What is new?

- **Filtering** is now able to accommodate any inline parts that makes finding the desired component a lot easier and more intuitive. The valve type can now be set to any value. The Instruments category will now also be able to accommodate any instrument, for example pressure transmitters in addition to flow meters.
- Axelerator now uses **link spec to project** instead of the previous copy spec to project. This offers two advantages:
    1. The user will have the same spec in all projects, regardless of the age of the project.
    2. Those who work with vault projects does not have to update the spec in vault anymore whenever there is a new version of the Axeleratorspec. Each user simply has to make sure to have the most up to date spec.
- The **right click function** has now been completely reworked from scratch. We can now link anywhere and quite easily make updates whenever a link is broken. The link is now part of the database which makes everything simpler.

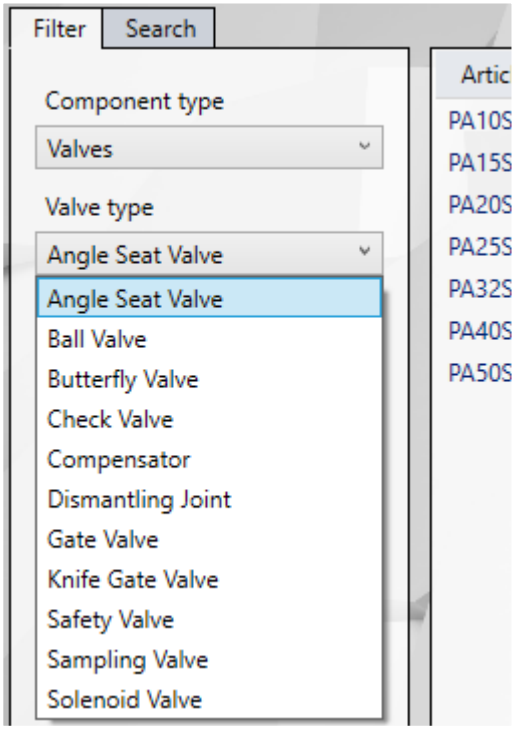

- In the about window, we have added information about the version of the spec, referred to as “Content date”

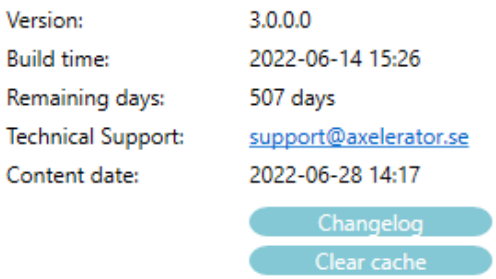

- Changed ISO-symbol of Proha sampling valve
- Addition of MAG5100W and MAG1100 flow meters without the MAG5000 transmitter.

How do I get v3.0?

- The new version has already been distributed to direct customers.
- For customers that have Naviate from Symetri, it will be distributed during August 2022.

If you require a free 30min session on the new version, please contact carl-philip.leissner@axelerator.se and you you will receive a slot.

2022-06-28

Addition of a quick coupling by GEKA. It is available under Miscellaneous -> Fittings.

GEKA® plus gängad bit EK - för dricksvatten - med utvändig gänga - G 1/2 till G 1 tum - rostfritt stål - max 40 bar

2022-05-11

Addition of a full lift safety valve from VYC Industrial model **496 ES** in DN20-200 PN40. It is located under Gate Valve until the next release of Axelerator , called AL65-496.The ES model is without the manual lever.

The input flange is PN40 between DN20-150 and PN25 for DN200. The output flange is PN16 for DN20-100 and PN10 for DN125-200.

Full datasheet can be found here and here

Also, the flange facing for the plastic valve AL20B by SAFI has been corrected to A because it is flat face instead of raised face (B1). There is an explanatory picture at the very end of this changelog regarding flange facings.

2022-04-06

Slight adjustment to AL35-88 with mixed ends, BSP/Long Weld ISO and BSP/Long Weld DIN.

1. Fixed handle parameter so that it can be rotated again.
2. Handle defaults to open position over the thread (factory default when delivered)

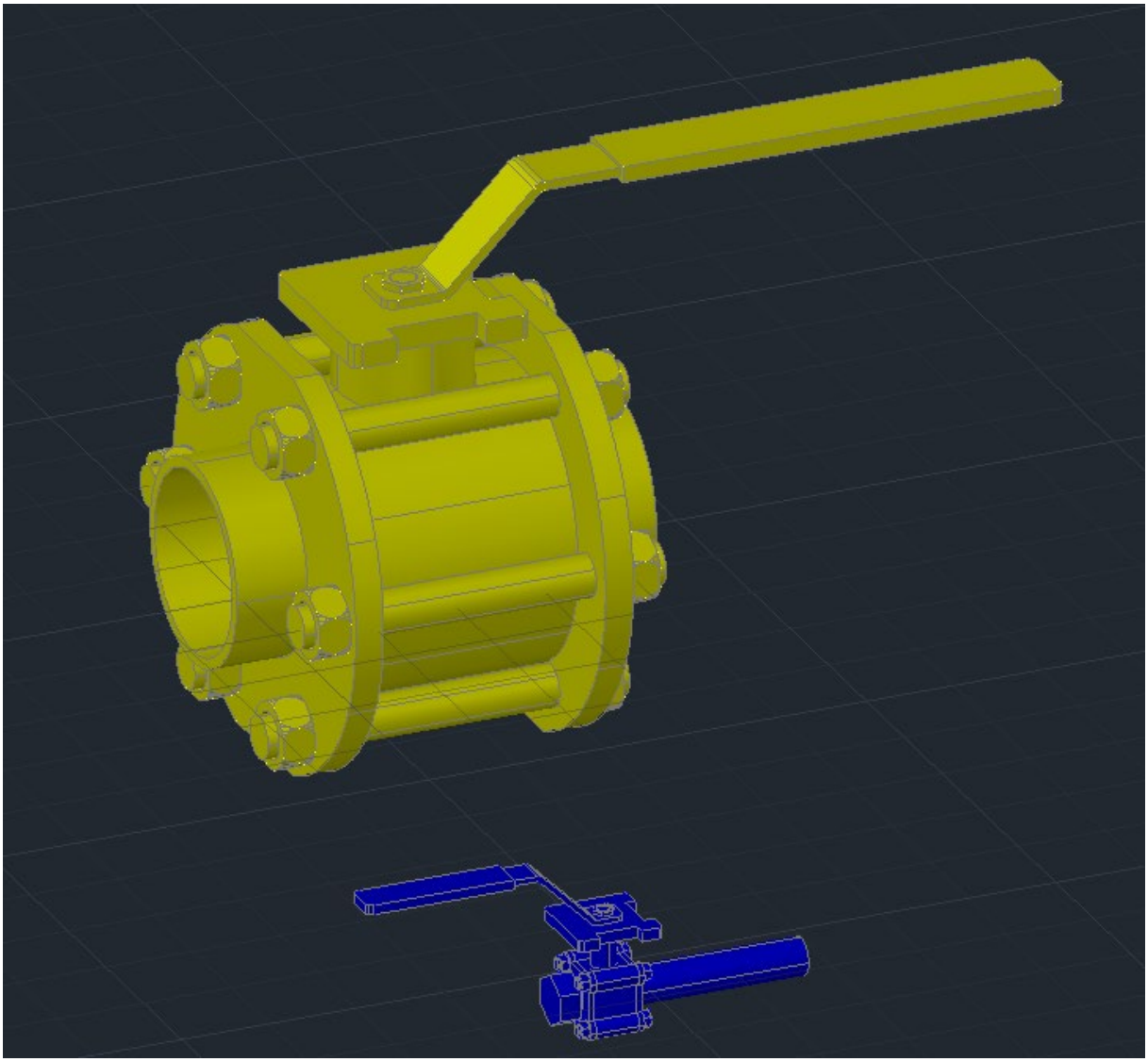

2022-04-06 Picture 1. *Handle now defaults to open position over the thread on mixed ends.*

2022-03-31

Addition of the flanged rubber compensator AL84-A1 by Stenflex. It is available in three materials; NBR, EPDM and CIIR where CIIR has drinking water approval WRAS and ACS. Dimensions DN40-1000. DN40-150 is both PN10 and PN16, whereas DN200-1000 is PN10.

For more information click here or here

2022-03-31 Picture 1. *Rubber compensator A1 by Stenflex*

2022-03-28

Addition of the lugged version 913 of the AL45-91 butterfly valve.

Available with RTFE (913) or metal seat (933)

Approvals and certificates:

Firesafe API 607, TA-Luft, ISO 15848-1, ATEX, SIL 2

Applications:

It is suitable for Oil Refining, Air Separation, Fossil & Cogeneration Power, Petrochemical, Steel Mill, LNG, Refinery, Pulp & Paper, CDA.

For more information click here

2022-03-28 Picture 1. *Lugged version of AL45-91. Series 913/933*

2022-03-16

Addition of the double excentric butterfly valve AL45-91 by Value Valves. Available in DN50-1000 in stainless steel for PN16 with handle or gearbox by Pro-Gear. Releasing the wafered version called “910” today, the lugged version called “913” will be released shortly.

Approvals and certificates:

Firesafe API 607, TA-Luft, ISO 15848-1, ATEX, SIL 2

Applications:

It is suitable for Oil Refining, Air Separation, Fossil & Cogeneration Power, Petrochemical, Steel Mill, LNG, Refinery, Pulp & Paper, CDA.

For more information click here

2022-03-16 Picture 1. *Wafered version of AL45-91. Series 910/930*

2022-03-15

1. Addition of a swing check valve by IMP Armature with drinking water approval, available in DN40-500 in PN10. It can be found under Valve -> Gate Valve -> VM6500 Swing Check Valve until the next version of Axelerator.

For more information click here

NORVA
SWING CHECK VALVE
Art. 435/436

DN 40 – DN 500
PN 10/16
DUCTILE IRON

2. Correction of build length on flow meter MAG5100 DN50 and DN65.

Part	Size	Old build length	New build length
Siemens MAG5100	DN50	~~250mm~~	200mm
Siemens MAG5100	DN65	~~300mm~~	200mm

2022-03-03

Addition of the plastic butterfly valve by Safi. Available in four different materials, PVC-C, PVC-U, PP-H and PVDF. Sizes DN50-1000 with handle from DN50-150 and gearbox from DN200-1000. It can be automated with actuators as an option.

Model	Material	Maximum Pressure	Certificates
AL44-3600	PVC-U	10 bar	ACS
AL44-3610	PVC-C	10 bar	
AL44-3700	PP-H	10 bar	
AL44-3800	PVDF	10 bar	

For more information, click here

DN50 – PP- H – with ABS Lever handle

DN200 –PVC-U – with Gearbox

2022-02-22

Addition of the Solenoid Valve 221G6 by Parker. It is available in stainless steel and can be ordered with several coil options; ATEX, IP67, low power and UL. Available in DN10-25.

- Suitable for aggressive media and environments
- Food and beverage processing
- Dishwasher disinfectors, sterilizers
- High grade corrosion resistant valve body, AISI 316L

221G Series

Valves for dry or lubricated air, neutral gases and liquids

Magnalift

AXELERATOR | BOX 805 | SE-194 28 Upplands Väsby | axelerator.se | info@axelerator.se | 08-670 65 67

Visiting Address | Nybrogatan 34 | 114 39 Stockholm

2022-02-18

Addition of the Solenoid Valve 7321B by Parker. It is available in brass and can be ordered with an optional ATEX coil.

- Suitable for fluids, light oils and steam
- Can be ordered with ATEX coil for Exd
- Speed control option on the valve allows for anti water hammer control when used for incompressible fluids.

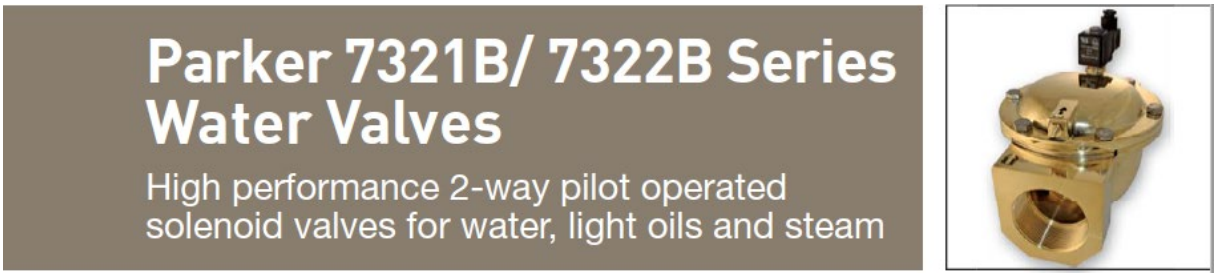

2022-02-04

Addition of the Angle Seat Valve by Parker. It is available in 316L stainless steel for DN10-DN50 up to 16 bar and comes with the ATEX approval and is normally closed. It has an integrated pneumatic actuator that requires 4-4,5 bars of air supply.

This valve is useful in any of these circumstances:

- Capable of handling corrosive solutions and slurry solutions with particles
- Cheaper option than a stainless steel solenoid valve

- Cost effective over an automated ball valve if the valve experiences frequent cycling on and off.

Flow Diagram

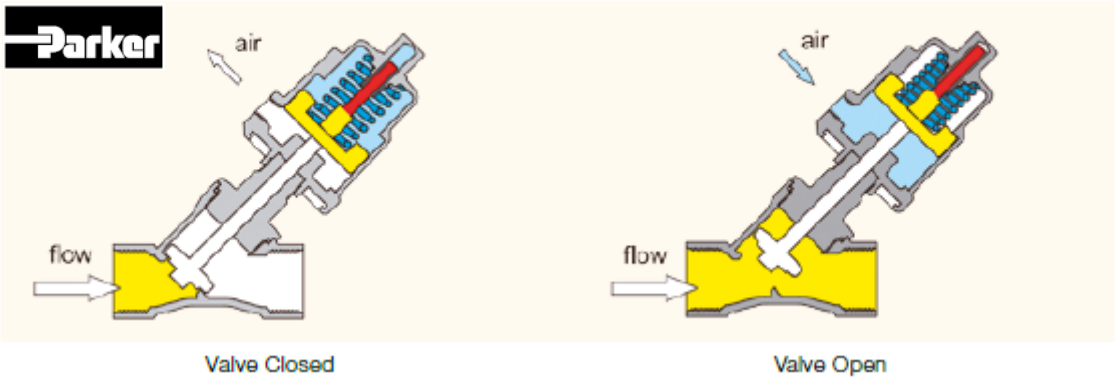

2022-02-04 Picture 1. *A schematic picture of the valve function.*

For more information, please check out the datasheet on Parkers homepage here

2022-01-31

Correction of the handlever length on AL42 and AL43 DN150-DN250.

They are now accurate to the table below.

Valve size AL42+AL43	Old length	New length
DN50	270mm	270mm
DN65	270mm	270mm
DN80	270mm	270mm
DN100	270mm	270mm
DN125	270mm	270mm
DN150	~~270mm~~	362mm
DN200	~~270mm~~	362mm
DN250	~~750mm~~	450mm
DN300	750mm	750mm

Handlever

For manual actuation ABO offers carbon steel lever suitably painted to improve resistance to corrosion, abrasion and shock. Stainless lever on request. Top flange connection according to ISO standards F05 for DN50 to DN65 and F07 for DN80 to DN200. Controlled lever upon request. The levers can be equipped with a lock to ensure an optimized position. The levers can be supplemented with limit switches.

Dimensions are mentioned in mm, weight in kg.

DN	32-100	125	150-200	250	300
A	270	270	362	450	750
B	75	75	75	135	135
Weight	1,24	1,26	1,40	2,20	3,10
Shaft	14x14	17x17	17x17	22x22	22x22

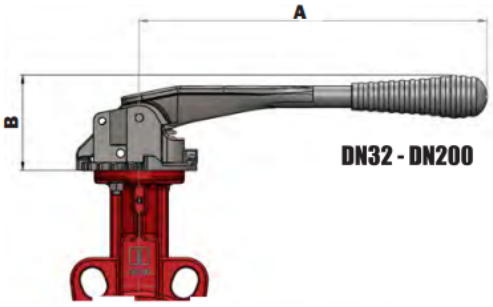

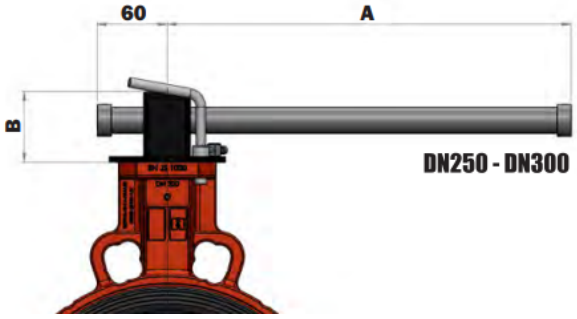

2022-01-28

Addition of a dismantling joint (Monteringsbox) called VM3188 by Ventim or the original part number BA85E000 PAS10 by Erhardt. It is available in DN50-1000 for PN10. The SKEY is COFL for Coupling on the isometric drawings. Until the next release of Axelerator, it can currently be found under Valve -> Gate Valve.

Size	Long Description (Size)	Certificates	Material
50	Dismantling Joint, VM3188/BA85E000_PN10_DN50	WRAS	Steel
65	Dismantling Joint, VM3188/BA85E000_PN10_DN65	WRAS	Steel
80	Dismantling Joint, VM3188/BA85E000_PN10_DN80	WRAS	Steel
100	Dismantling Joint, VM3188/BA85E000_PN10_DN100	WRAS	Steel
125	Dismantling Joint, VM3188/BA85E000_PN10_DN125	WRAS	Steel
150	Dismantling Joint, VM3188/BA85E000_PN10_DN150	WRAS	Steel
200	Dismantling Joint, VM3188/BA85E000_PN10_DN200	WRAS	Steel
250	Dismantling Joint, VM3188/BA85E000_PN10_DN250	WRAS	Steel
300	Dismantling Joint, VM3188/BA85E000_PN10_DN300	WRAS	Steel
350	Dismantling Joint, VM3188/BA85E000_PN10_DN350	WRAS	Steel
400	Dismantling Joint, VM3188/BA85E000_PN10_DN400	WRAS	Steel
450	Dismantling Joint, VM3188/BA85E000_PN10_DN450	WRAS	Steel
500	Dismantling Joint, VM3188/BA85E000_PN10_DN500	WRAS	Steel
600	Dismantling Joint, VM3188/BA85E000_PN10_DN600	WRAS	Steel
700	Dismantling Joint, VM3188/BA85E000_PN10_DN700	WRAS	Steel
800	Dismantling Joint, VM3188/BA85E000_PN10_DN800	WRAS	Steel
900	Dismantling Joint, VM3188/BA85E000_PN10_DN900	WRAS	Steel
1000	Dismantling Joint, VM3188/BA85E000_PN10_DN1000	WRAS	Steel

2022-01-25

Addition of the AL35-88 as BSP/Long Weld ISO and BSP/Long Weld DIN. Available in DN8-50 for both pipe standards.

They carry the following metadata for long description size (below are two examples)

Long Description	Certificates	Material
Ball Valve, AL35-88-SS BSP/LWISO DN50 FG F05-F07/14 TFM1600	ATEX, SIL 3, TA-Luft	Stainless steel
Ball Valve, AL35-88-SS BSP/LWDIN DN8 FG F03-F04/9 TFM1600	ATEX, SIL 3, TA-Luft	Stainless steel

2021-01-15 Table 1. *Added 35-88 BSP/Long Weld components*

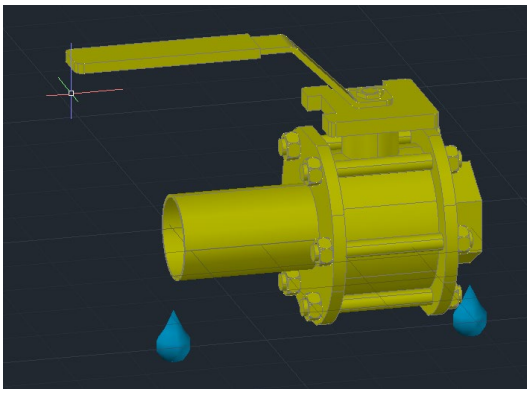

2021-01-24

Addition of the Proha samling valve with a DN15 BSPP connection (Threaded male) and up to PN25. Despite it being a needle valve it will be found under Ball Valve until the next update of the entire Axelerator platform.

For more information, click here

2022-01-18

1. Addition of 35-77 long weld ISO and DIN. Only available in PN16 at this point. We will add PN40 and 63 later on.

Long Desc	Certificates	Material
Ball Valve, AL35-77-SS DN15 F03-F04-F05/9 DIN Long Weld	ATEX, TA-Luft	Stainless Steel
Ball Valve, AL35-77-SS DN20 F03-F04-F05/9 DIN Long Weld	ATEX, TA-Luft	Stainless Steel
Ball Valve, AL35-77-SS DN25 F04-F05/11 DIN Long Weld	ATEX, TA-Luft	Stainless Steel
Ball Valve, AL35-77-SS DN32 F04-F05/11 DIN Long Weld	ATEX, TA-Luft	Stainless Steel
Ball Valve, AL35-77-SS DN40 F05-F07/14 DIN Long Weld	ATEX, TA-Luft	Stainless Steel
Ball Valve, AL35-77-SS DN50 F05-F07/14 DIN Long Weld	ATEX, TA-Luft	Stainless Steel
Ball Valve, AL35-77-SS DN65 F07-F10/17 DIN Long Weld	ATEX, TA-Luft	Stainless Steel
Ball Valve, AL35-77-SS DN80 F07-F10/17 DIN Long Weld	ATEX, TA-Luft	Stainless Steel
Ball Valve, AL35-77-SS DN100 F07-F10/17 DIN Long Weld	ATEX, TA-Luft	Stainless Steel
Ball Valve, AL35-77-SS DN15 F03-F04-F05/9 ISO Long Weld	ATEX, TA-Luft	Stainless Steel
Ball Valve, AL35-77-SS DN20 F03-F04-F05/9 ISO Long Weld	ATEX, TA-Luft	Stainless Steel
Ball Valve, AL35-77-SS DN25 F04-F05/11 ISO Long Weld	ATEX, TA-Luft	Stainless Steel
Ball Valve, AL35-77-SS DN32 F04-F05/11 ISO Long Weld	ATEX, TA-Luft	Stainless Steel
Ball Valve, AL35-77-SS DN40 F05-F07/14 ISO Long Weld	ATEX, TA-Luft	Stainless Steel
Ball Valve, AL35-77-SS DN50 F05-F07/14 ISO Long Weld	ATEX, TA-Luft	Stainless Steel
Ball Valve, AL35-77-SS DN65 F07-F10/17 ISO Long Weld	ATEX, TA-Luft	Stainless Steel
Ball Valve, AL35-77-SS DN80 F07-F10/17 ISO Long Weld	ATEX, TA-Luft	Stainless Steel
Ball Valve, AL35-77-SS DN100 F07-F10/17 ISO Long Weld	ATEX, TA-Luft	Stainless Steel

2021-01-18 Picture 1. *Added 35-77 long weld components*

2. Check valve AL53-170 was FL and is now WF.
3. AL2E3 has now been renamed to AL42-A-2E3 and part numbers have been added so the right click function is now operational as well.
4. Addition of a new thermoplastic valve AL20-B!

Sizes	Long Description (Size)	Long Description (F)	Certificates	Material
15	Ball Valve, AL20-B-2029-00FFE DN15 PN10 PVDF/EPDM	Ball Valve, AL20_B	ACS, ISO 15848, NR320	PVDF
20	Ball Valve, AL20-B-2029-00FFE DN20 PN10 PVDF/EPDM	Ball Valve, AL20_B	ACS, ISO 15848, NR320	PVDF
25	Ball Valve, AL20-B-2029-00FFE DN25 PN10 PVDF/EPDM	Ball Valve, AL20_B	ACS, ISO 15848, NR320	PVDF
32	Ball Valve, AL20-B-2029-00FFE DN32 PN10 PVDF/EPDM	Ball Valve, AL20_B	ACS, ISO 15848, NR320	PVDF
40	Ball Valve, AL20-B-2029-00FFE DN40 PN10 PVDF/EPDM	Ball Valve, AL20_B	ACS, ISO 15848, NR320	PVDF
50	Ball Valve, AL20-B-2029-00FFE DN50 PN10 PVDF/EPDM	Ball Valve, AL20_B	ACS, ISO 15848, NR320	PVDF

2021-01-18 Picture 2. Extract of the added thermoplastic valves

To read more about the valve, click here

2021-12-22

Addition of AL42 PN10. The valve is compatible with PN10 and PN16 in all sizes except DN450.

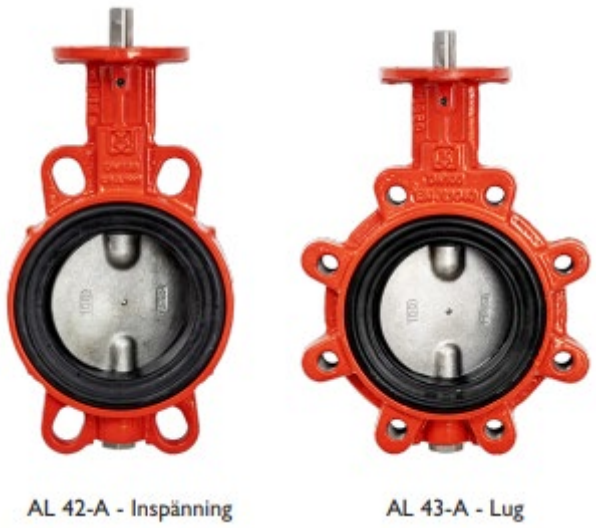

Installation between flanges DN32 to DN600 - Wafer/Lug design

	DN	32/40	50	65	80	100	125	150	200	250	300	350	400	450	500	600
B	PN6											•	•	•	•	•
	PN10															
	PN16													•		
	Class 150											•	•	•	•	•

2021-12-13

Addition of Auma actuators to the latest AL2E3 valve.

The Auma actuators in Axelerator always have the Auma AC01.2 control unit attached and the weight is always presented as the total weight (of valve + gearbox + actuator + control unit).

Butterfly Valve, AL2E3_DN600_PN10_Gearbox	339	600	Ductile Iron	Flange facing B1	10	Gearbox
Butterfly Valve, AL2E3_DN600_PN10_Auma_SA10.2	371	600	Ductile Iron	Flange facing B1	10	Electric
Butterfly Valve, AL2E3_DN700_PN10_Auma_SA10.2	488	700	Ductile Iron	Flange facing B1	10	Electric
Butterfly Valve, AL2E3_DN700_PN10_Gearbox	456	700	Ductile Iron	Flange facing B1	10	Gearbox
Butterfly Valve, AL2E3_DN800_PN10_Auma_SA10.2	695	800	Ductile Iron	Flange facing B1	10	Electric
Butterfly Valve, AL2E3_DN800_PN10_Gearbox	663	800	Ductile Iron	Flange facing B1	10	Gearbox
Butterfly Valve, AL2E3_DN900_PN10_Gearbox	840	900	Ductile Iron	Flange facing B1	10	Gearbox

2021-12-13 picture 1. Extract of the new options to the valve AL2E3.

2021-12-13 Picture 2. Auma 01.2 control unit.

2021-12-07

Addition of a butterfly valve (vridspjällsventil) called AL2E3 by Axel Larsson. Available in DN150-1000 in PN10 and is in ductile iron with WRAS certification. For more information check here:

https://www.abovalve.com/wp-content/uploads/2021/09/EN_Double_Excentric_2E3_Email.pdf

The metadata with partnumber and weblink will be updated soon.

Also, there will also be an update on the version with Auma actuator coming within a week.

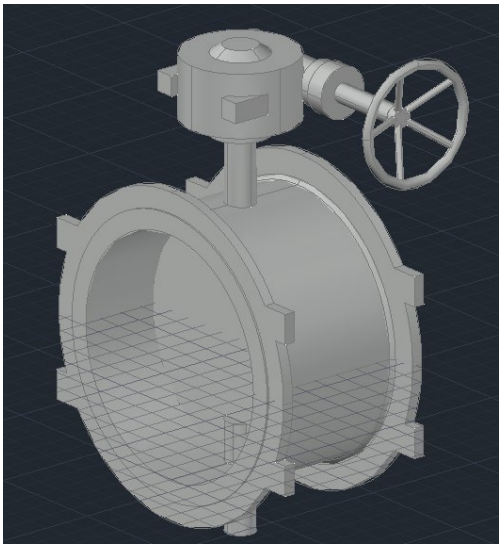

2021-12-01

Addition of a disc check valve (diskbackventil) called AL53-170 by Axel Larsson. Available in DN15-100 in PN40 and is in stainless steel. For more information check here:

https://www.axel-larsson.se/exego.aspx?p_id=340&ItemLevel1_ID=8001&ItemLevel2_ID=9008&ItemLevel3_ID=7021

It is temporarily available under the Gate Valve-section until the next major update of Axelerator.

2021-11-26

Correction of AL25-PZ flange diameter on PN16 DN100-300. Flange diameter was the same for PN40 and PN16, resulting in mismatched flanges but only visually.

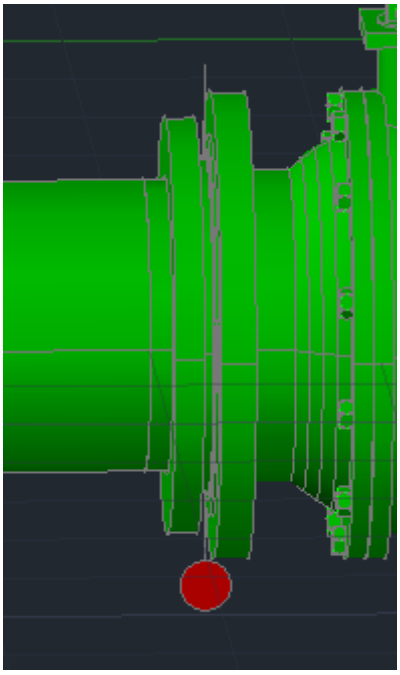

Old

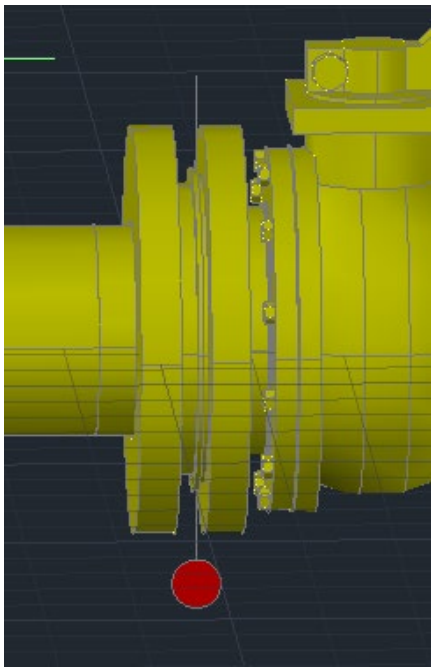

New

AL48 spelling correction on metadata.

LongDescriptionSwe is now populated on all components.

LongDescriptionSwe:	Kilslidsventil, AL13-42 DN50 EPDM PN10

2021-11-15

Correction of build length (bygglängd) on AL35-88 DN65 short weld. Was 139mm, now 185mm.

Correction of build length (bygglängd) on AL35-55 DN80 long weld. Was 334mm, now 354mm.

Affected parts:

Article number	Description	Weight [kg]	Build length old [mm]	Build length new [mm]
1188809	Ball Valve, AL35-88-SS DIN DN65	12	~~139~~	185
1188709	Ball Valve, AL35-88-SS ISO DN65	12	~~139~~	185
1155LS080	Ball Valve, AL35-55A, Long Weld, F10, DN80, PN40	10.7	~~334~~	354

2021-11-12

Addition of a nozzle check valve (dysbackventil) by Erhardt, model BA43E000 in PN10, DN80-600.

Temporarily available under Gate Valve due to the filtering function in Axelerator needs an update to

accommodate for new types of components. It will in a future release of Axelerator become available under Check Valve.

https://www.erhard.de/en/products/categories/security-and-control-valves/non-return-valves/non-slam-nozzle-check-valve-edrv/

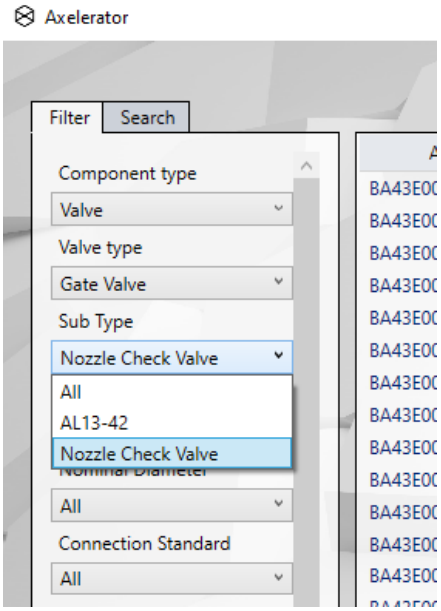

2021-09-10

The rotate function has now been activated as a part of the betatest for evaluating the content update-function. The function rotates the gearbox/actuator/lever in steps of 90 degrees counterclockwise for each click on the button. Simply right click on the model you wish to rotate and this option pops up.

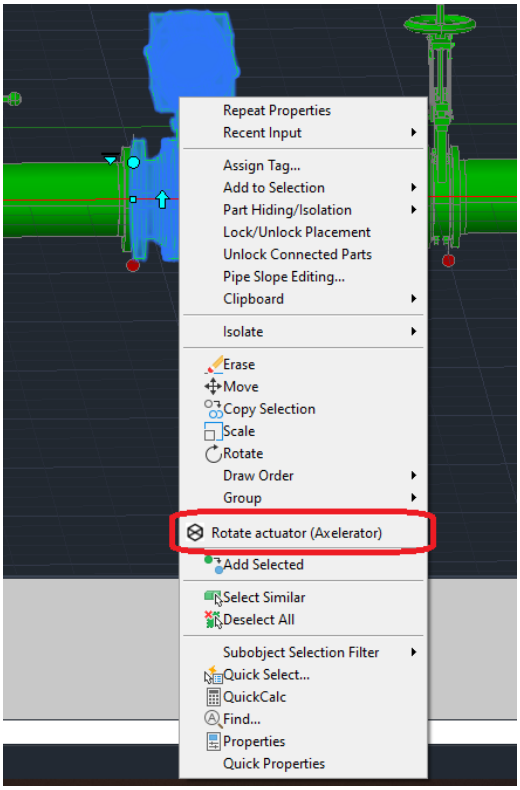

2021-09-06

The correction of flange facing caused some issues between the components and AutoCAD. During a transition period the flanged components will carry the option of both B1 and C-facings to accommodate for pipe specs that use either of them.

Article number	Description	Weight [	Nominal Diameter	Material	Connection	Pressure c
1453281	Ball Valve, AL25-PZ06 SS DN80 TTTG PN16 F10 L: F4	22	80	Stainless steel	Flange facing C	16
1453281	Ball Valve, AL25-PZ06 SS DN80 TTTG PN16 F10 L: F4	22	80	Stainless steel	Flange facing B1	16

2021-08-30

Facing of all flanged valves changed from C to B1 according to EN1092-1. B1 is also called Raised Face (RF) and is the most commonly used flange facing as of today in wastewater and process industry.

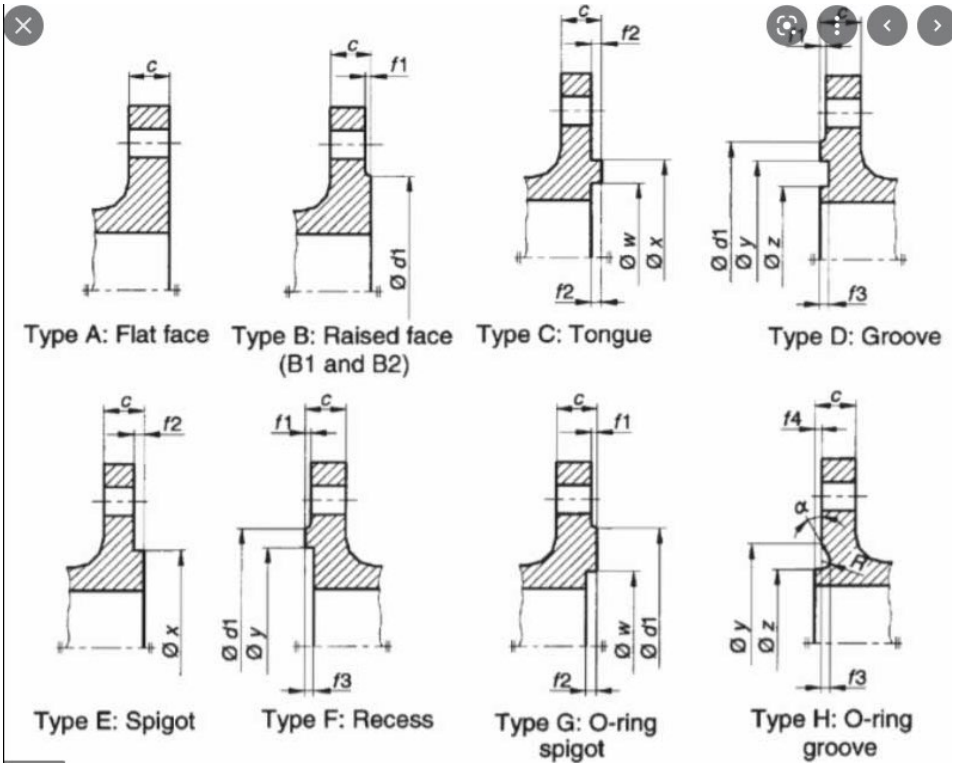

Picture 1. List of the flange facings according to EN1092-1